TRAIL FORTRESS

BUILT FOR THE TRAIL. CHECKED FOR YOUR TRUCK.

Rough Country 21004 Installation Instructions

Oval Nerf Step Bars for Ram 1500 (2019–2025)

Part number: 21004

trailfortress.com/rough-country-oval-nerf-step-21004

Scan for fitment, price and install help

ROUGH COUNTRY SUSPENSION SYSTEMS®

21004

PARTS LIST:

1	Driver/left side 5” Oval Bent End Sidebar	12	8-1.25mm x 25mm Combo Hex Bolts
1	Passenger/right side 5” Oval Bent End Sidebar	18	8mm x 24mm x 2mm Flat Washers
6	Mounting Brackets	18	8-1.25mm Nylon Lock Nuts

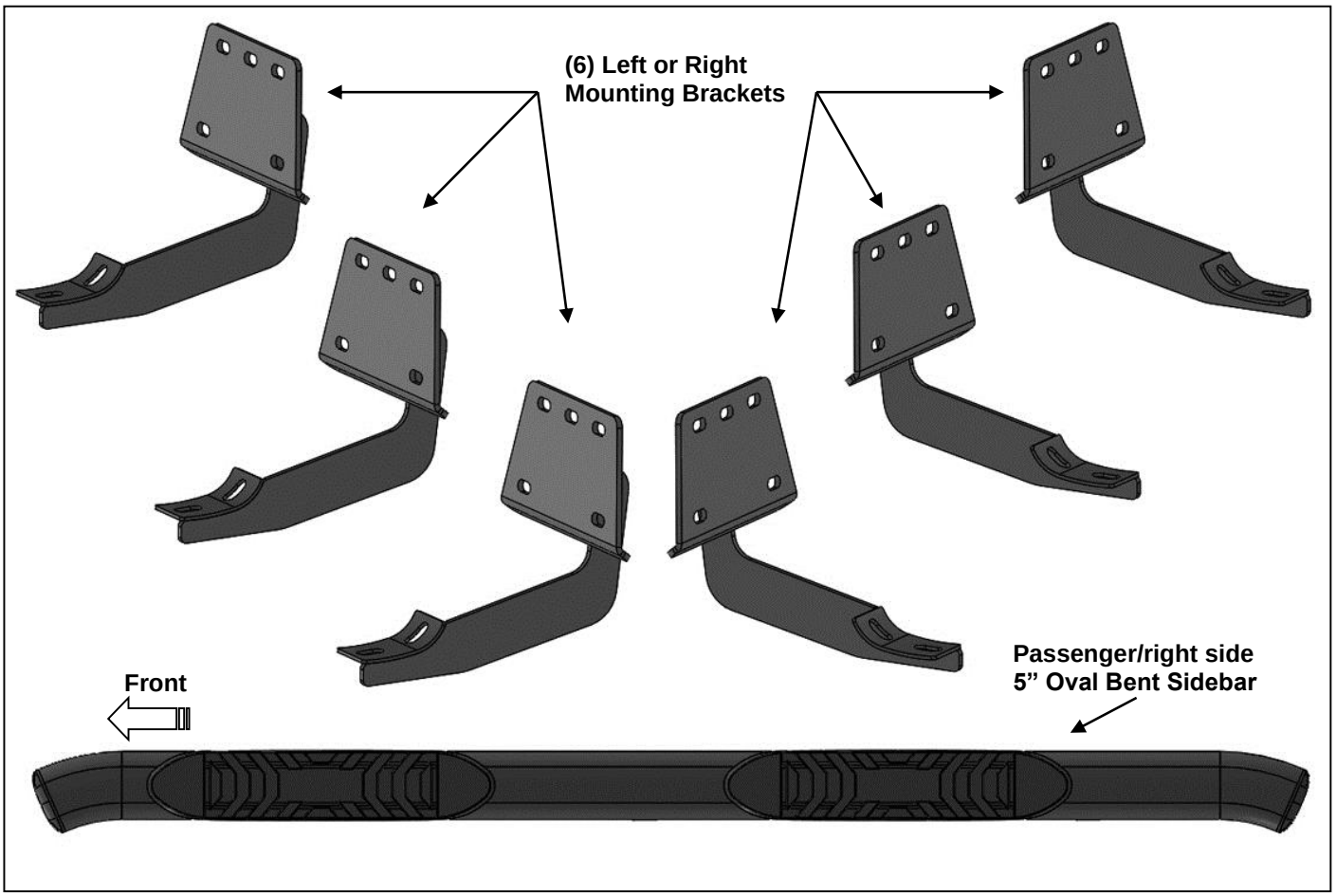

PROCEDURE:

REMOVE CONTENTS FROM BOX. VERIFY ALL PARTS ARE PRESENT. READ INSTRUCTIONS CAREFULLY BEFORE STARTING INSTALLATION. ASSISTANCE IS RECOMMENDED.

1. Start the installation under the passenger side of the vehicle. Locate the front (3) factory studs along the inner side of the body panel, **(Figure 1)**.
2. Select (1) Mounting Bracket. **NOTE**: All (6) Brackets are universal and will fit left or right side. Attach the Mounting Bracket to the (3) factory studs with (3) 8mm Flat Washers and (3) 8mm Nylon Lock Nuts, **(Figures 2 & 3)**. Leave brackets loose at this time.

trailfortress.com/rough-country-oval-nerf-step-21004

3. Repeat **Steps 1 & 2** to install the Universal Brackets in the center and rear mounting locations along the body panel, **(Figure 4—7)**.
4. Carefully unwrap and select the Passenger/right Sidebar. Use the illustration above to help identify the correct Sidebar. Place the Sidebar on top of the Brackets. **IMPORTANT**: Do not slide, (front to back or rotate), the Sidebar on the Brackets or damage to the finish on the Sidebar may result.
5. Attach the Sidebar to the Brackets with (6) 8mm Combo Hex Bolts, **(Figures 8 & 9)**. Do not tighten hardware at this time.
6. Level and adjust the Sidebar as necessary and fully tighten all hardware.
7. Repeat **Steps 1—6** for Driver/left Sidebar installation.
8. Do periodic inspections to the installation to make sure that all hardware is secure and tight.

To protect your investment, wax this product after installing. Regular waxing is recommended to add a protective layer over the finish. Do not use any type of polish or wax that may contain abrasives that could damage the finish. Mild soap may be used also to clean the Sidebar.

Passenger/right Side Installation Pictured

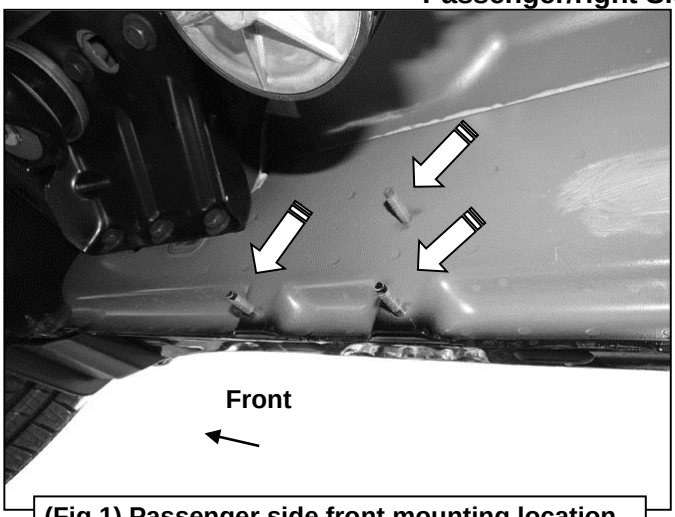

(Fig 1) Passenger side front mounting location

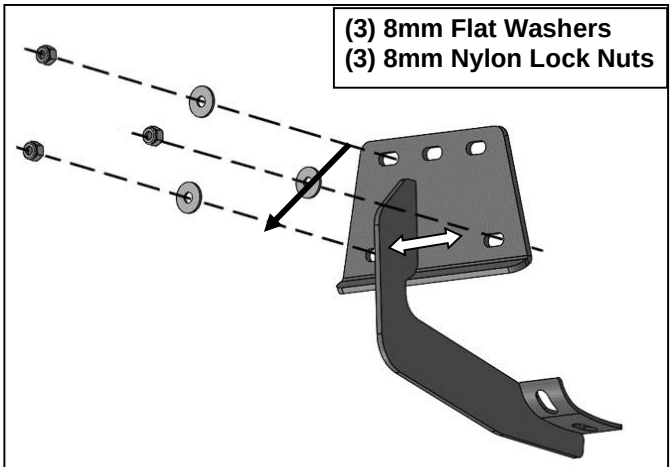

(Fig 2) Attach Bracket to the (3) studs

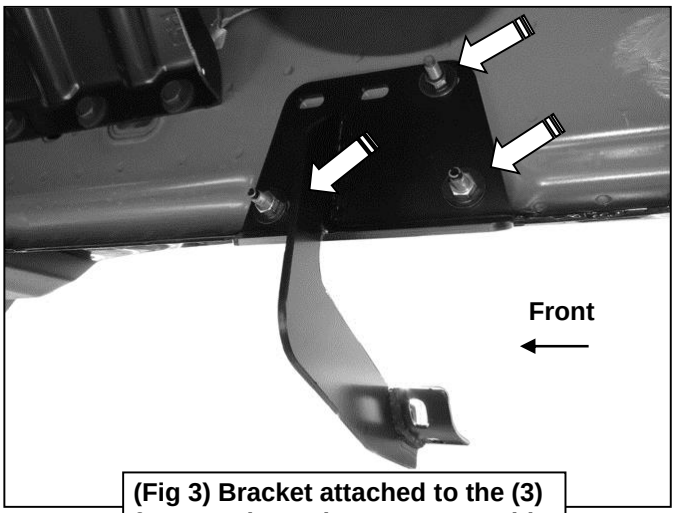

(Fig 3) Bracket attached to the (3) front studs on the passenger side

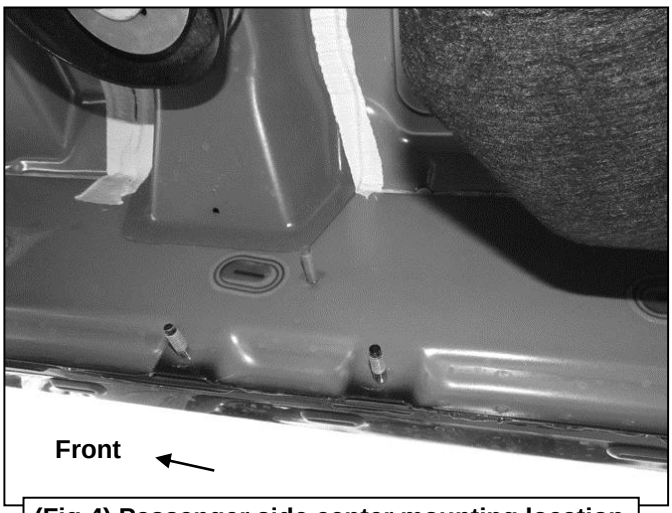

(Fig 4) Passenger side center mounting location

trailfortress.com/rough-country-oval-nerf-step-21004

Passenger/right Side Installation Pictured

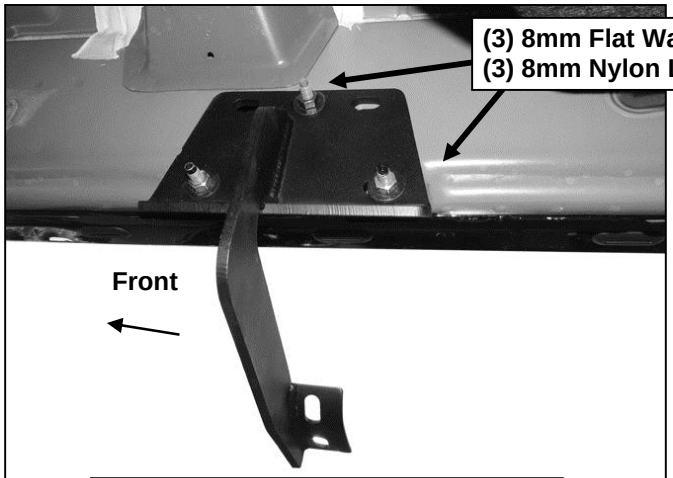

(Fig 5) Bracket attached to the (3) center studs on the passenger side



(Fig 6) Passenger side rear mounting location

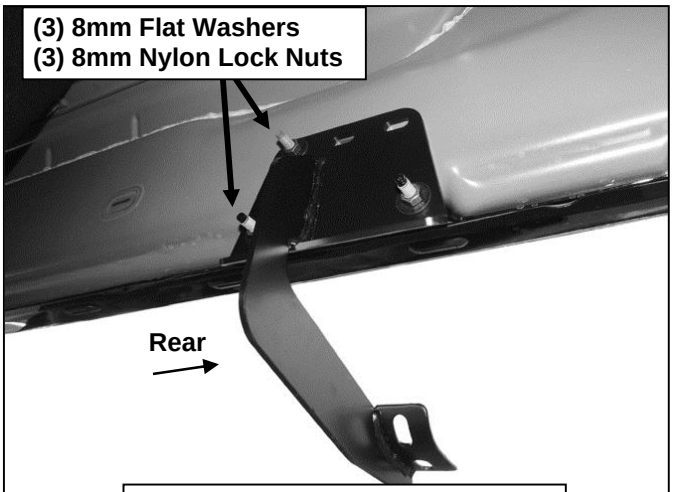

(Fig 7) Bracket attached to the (3) rear studs on the passenger side

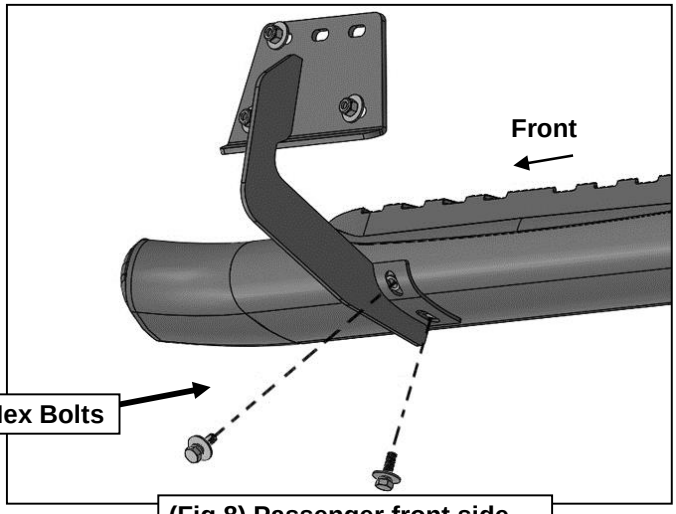

(Fig 8) Passenger front side Bracket attached to Sidebar

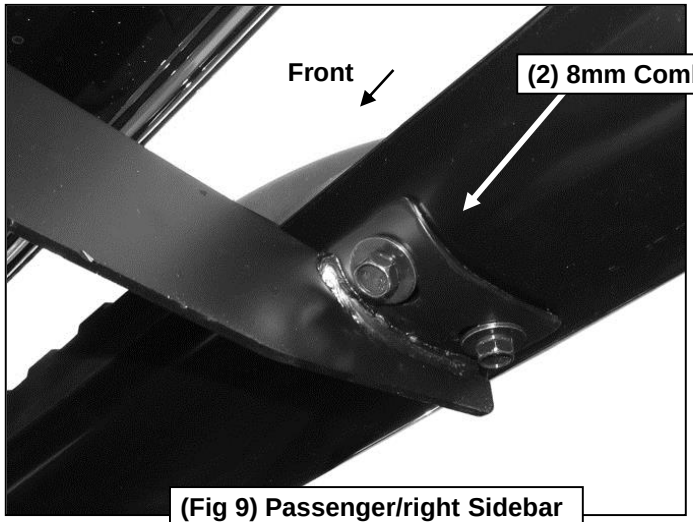

(Fig 9) Passenger/right Sidebar attached to Bracket pictured

trailfortress.com/rough-country-oval-nerf-step-21004