TRAIL FORTRESS

BUILT FOR THE TRAIL. CHECKED FOR YOUR TRUCK.

Rough Country 21002 Installation Instructions

Oval Nerf Steps with 4.5-Inch Stepping Area: Crew Cab

Part number: 21002

trailfortress.com/oval-nerf-steps-rough-country-21002

Scan for fitment, price and install help

ROUGH COUNTRY SUSPENSION SYSTEMS®

21002

PARTS LIST:

1	Driver/left Sidebar	16	8-1.25mm x 30mm Hex Bolts
1	Passenger/right Sidebar	16	8-1.25mm x 25mm Combo Bolts
8	Mounting Brackets	16	8mm Lock Washers
		16	8mm x 24mm x 2mm Flat Washers

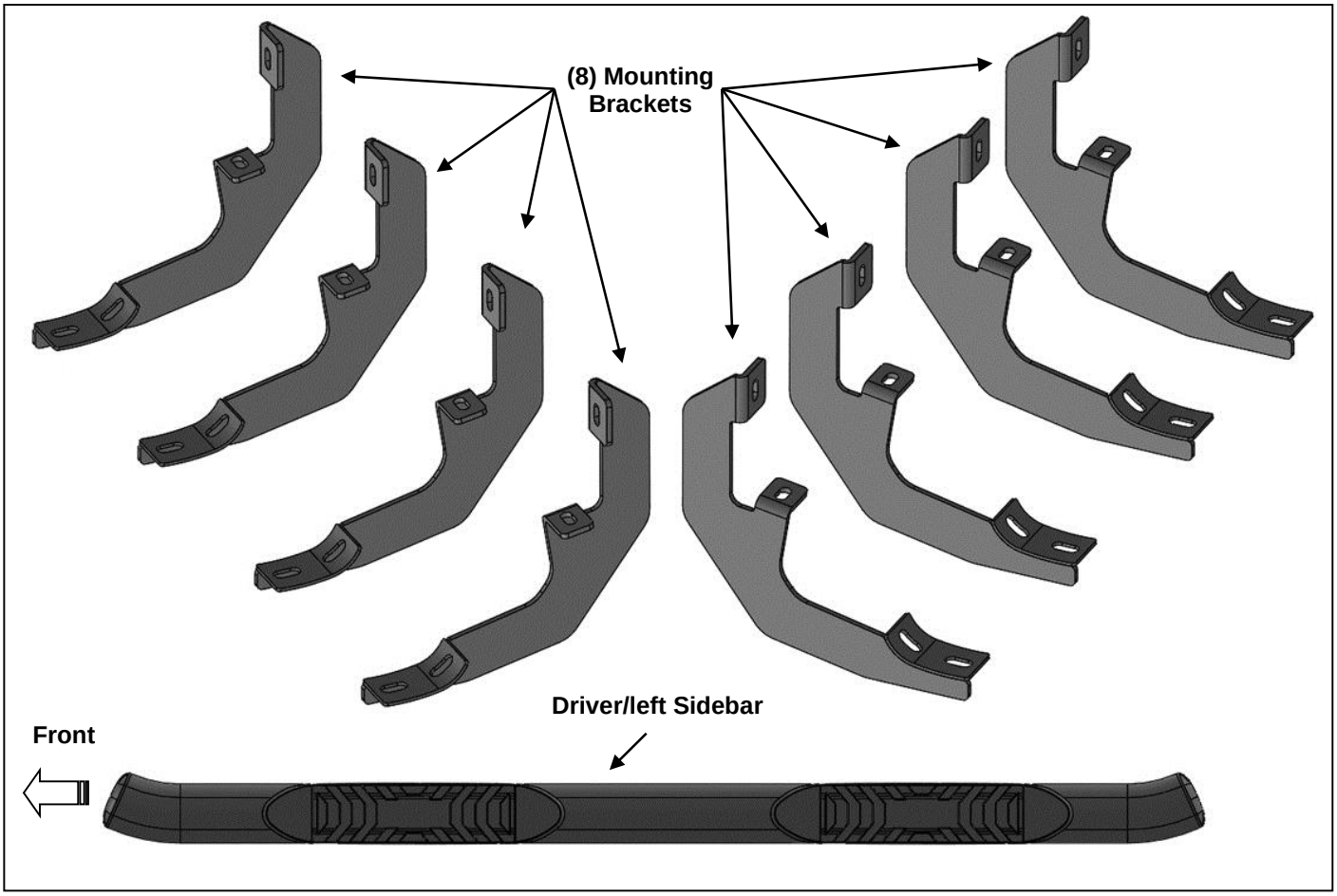

PROCEDURE:

REMOVE CONTENTS FROM BOX. VERIFY ALL PARTS ARE PRESENT. READ INSTRUCTIONS CAREFULLY BEFORE STARTING INSTALLATION. ASSISTANCE IS RECOMMENDED.

1. Start the installation under the driver side of the vehicle. Locate the 6 plugs along the bottom edge of the body. Mounting Brackets will bolt to the 1st, 3rd, 4th and 6th threaded mounting holes, **(Figures 1—5)**. Remove the plastic plugs from each mounting location. Directly above each threaded insert is a top mounting location on the side of the body panel. Hold a Bracket up in place to help determine the mounting holes to use along the body. **NOTE:** Thread an 8mm Hex Bolt into the threaded inserts to clear paint as required.

trailfortress.com/oval-nerf-steps-rough-country-21002

2. Select (1) Mounting Bracket. Starting at the front of the driver/left side, bolt the Mounting Bracket to the factory threaded holes with (2) 8mm Hex Bolts, (2) 8mm Lock Washers and (2) 8mm Flat Washers, **(Figures 6 & 7)**. Do not tighten hardware at this time.
3. Repeat **Steps 1 & 2** to install (3) Mounting Brackets on the remaining driver/left side mounting locations along the body panel, **(Figures 8—10)**.
4. Select the Driver/left Sidebar. Use the illustration above to help determine the correct Sidebar. Place the Sidebar on top of the Brackets. **IMPORTANT:** Do not slide, (front to back or rotate), the Sidebar on the Brackets or damage to the finish may result.
5. Attach the Sidebar to the Brackets with (8) 8mm Combo Bolts, **(Figures 11—15)**.
6. Level and adjust the Sidebar and fully tighten all hardware.
7. Repeat **Steps 1—6** to install the Passenger/right Sidebar.
8. Do periodic inspections to the installation to make sure that all hardware is secure and tight.

To protect your investment, wax this product after installing. Regular waxing is recommended to add a protective layer over the finish. Do not use any type of polish or wax that may contain abrasives that could damage the finish. Aluminum polish may be used to polish small scratches and scuffs on the finish. Mild soap may be used also to clean the Sidebars.

Driver/left side Installation Pictured

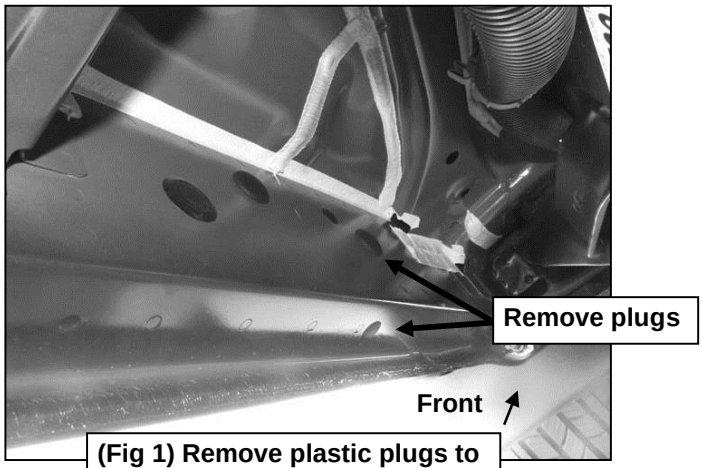

(Fig 1) Remove plastic plugs to uncover threaded inserts

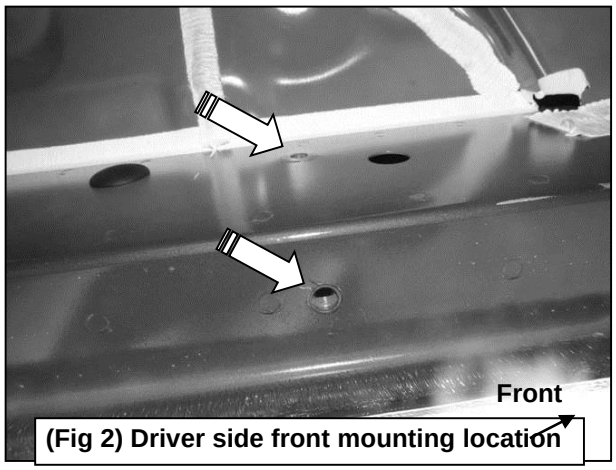

(Fig 2) Driver side front mounting location

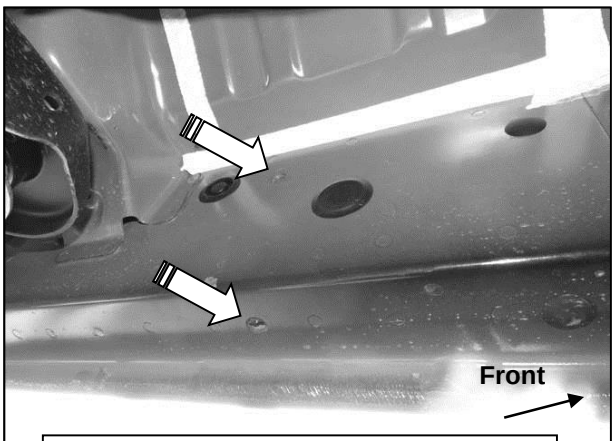

(Fig 3) Driver side 2nd mounting location

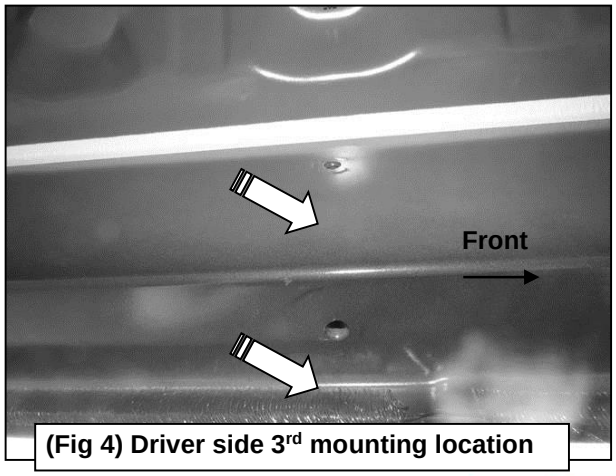

(Fig 4) Driver side 3rd mounting location

trailfortress.com/oval-nerf-steps-rough-country-21002

Driver/left side Installation Pictured

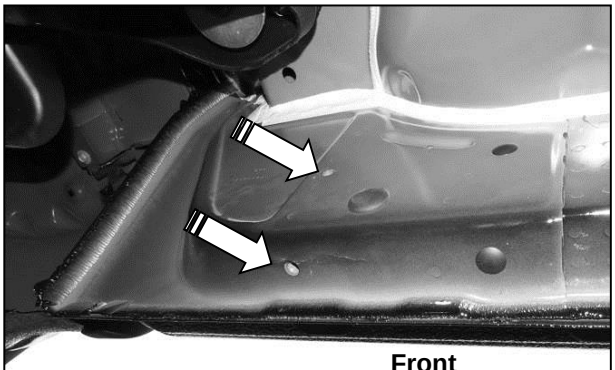

(Fig 5) Driver side rear mounting location

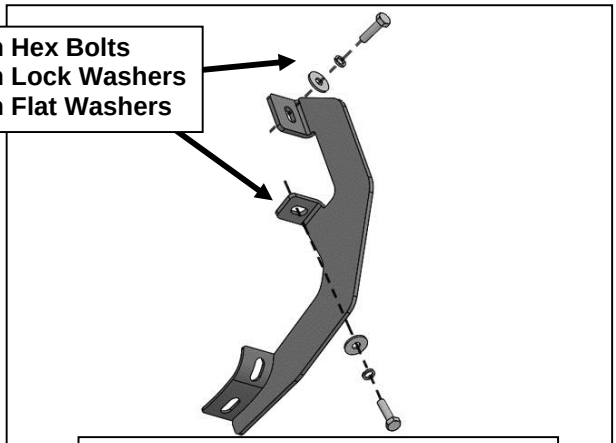

(Fig 6) Mounting Bracket illustration

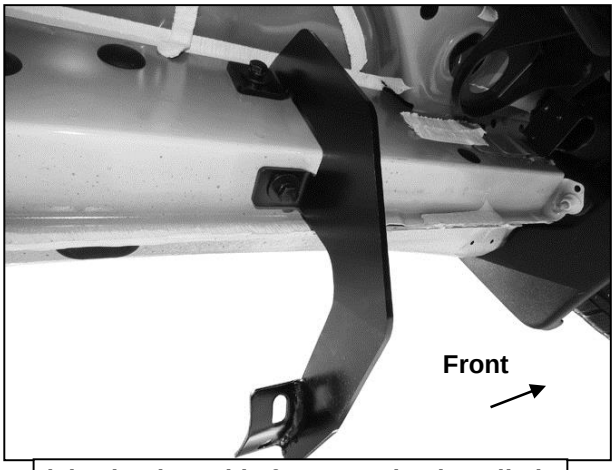

(Fig 7) Driver side front Bracket installed

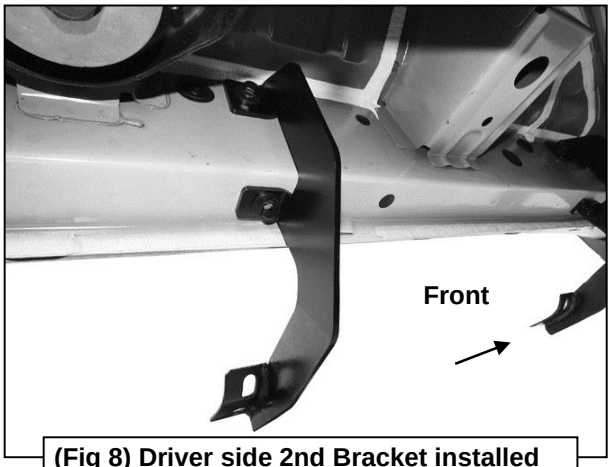

(Fig 8) Driver side 2nd Bracket installed

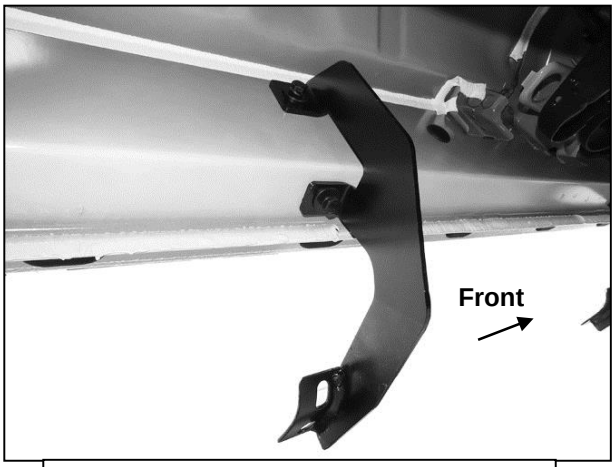

(Fig 9) Driver side 3rd Bracket installed

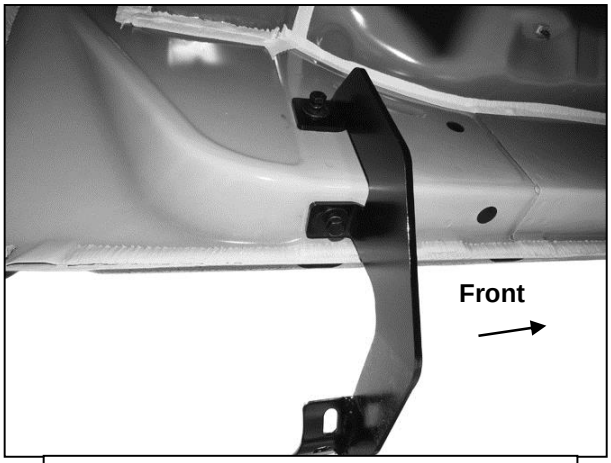

(Fig 10) Driver side rear Bracket installed

trailfortress.com/oval-nerf-steps-rough-country-21002

Driver/left side Installation Pictured

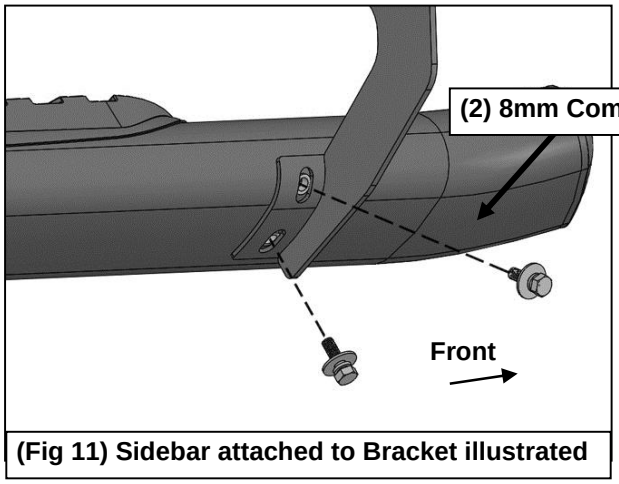

(Fig 11) Sidebar attached to Bracket illustrated

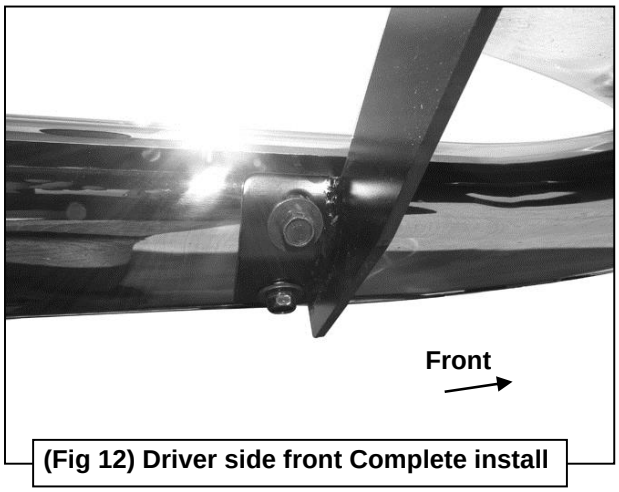

(Fig 12) Driver side front Complete install

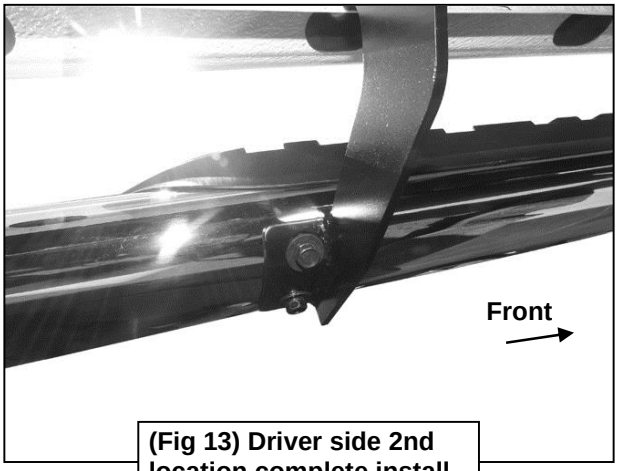

(Fig 13) Driver side 2nd location complete install

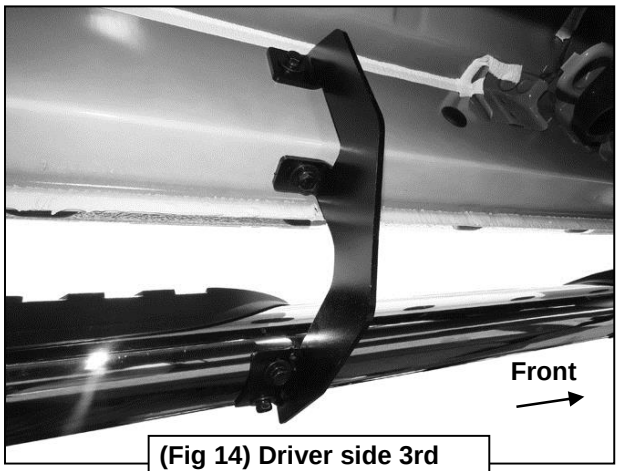

(Fig 14) Driver side 3rd location complete install

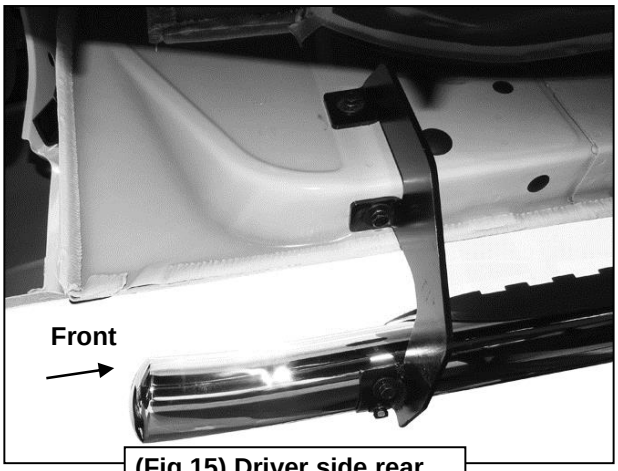

(Fig 15) Driver side rear location complete install

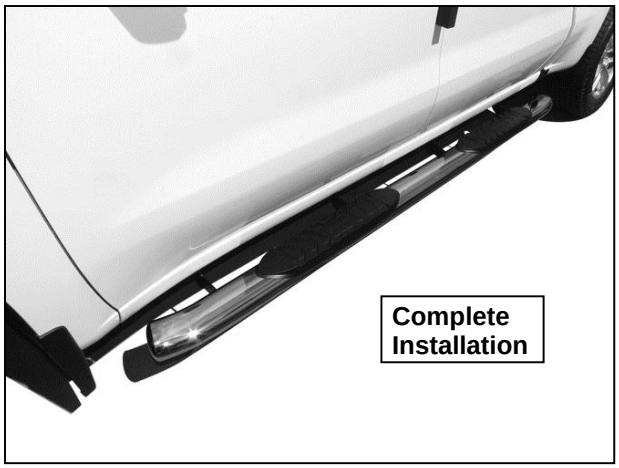

trailfortress.com/oval-nerf-steps-rough-country-21002