TRAIL FORTRESS

BUILT FOR THE TRAIL. CHECKED FOR YOUR TRUCK.

Rough Country 21001S Installation Instructions

Oval Nerf Step Bars, 4.5-Inch Step Area: Crew Cab Only

Part number: 21001S

trailfortress.com/rough-country-oval-nerf-steps-21001s

Scan for fitment, price and install help

ROUGH COUNTRY
SUSPENSION SYSTEMS®

21001

PARTS LIST:

1	Driver/left Sidebar	25	8-1.25mm x 25mm Hex Bolt
1	Passenger/right Sidebar	25	8mm x 24mm x 2mm Flat Washer
1	Passenger/right Front Upper Bracket (all incl. DEF)	25	8mm Lock Washer
1	Passenger/right Front Lower Bracket (all incl. DEF)	1	8mm Bolt Plate
5	5" Sidebar Brackets (use for left or right)	1	8mm Nylon Lock Nut (use w-bolt plate)
11	8-1.25mm Clip-On Nuts		

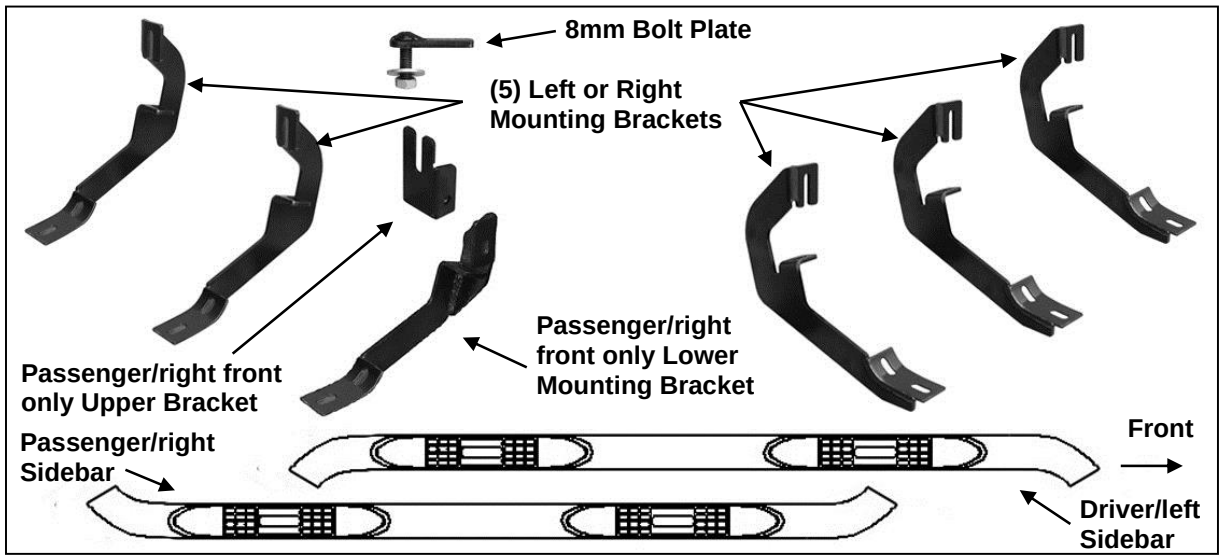

PROCEDURE:
REMOVE CONTENTS FROM BOX. VERIFY ALL PARTS ARE PRESENT. READ INSTRUCTIONS CAREFULLY BEFORE STARTING INSTALLATION. ASSISTANCE IS RECOMMENDED. ON MODELS WITH DEF TANK, SELECT A FLAT, LEVEL AREA FOR INSTALLATION. MAY REQUIRE CUTTING.

1. Start the installation under the driver side of the vehicle. Locate the 5 tabs along the bottom edge of the body, (pinch weld). Mounting Brackets will bolt to the 1st, 2nd, (just in front of center of cab), and 5th mounting tabs, **(Figure 1)**. Directly above each tab is a top mounting location on the side of the body panel. Hold a Bracket up in place to help determine the mounting holes to use along the body.
2. Determine the correct procedure for your model year and each Bracket location.

Bottom mounting location on the edge of the pinch weld.

Flat tab on pinch weld with factory installed weld nut:

Thread hex bolt into weld nut from the backside-down to clear paint from threads, **(Figure 2)**.

Flat tab on pinch weld with hole:

Select (1) 8mm Clip Nut. Slide the Clip Nut over the tab with the nut facing up behind the tab, **(Figures 3—5)**. Line up threaded nut with hole in tab. Repeat for each mounting location.

Top mounting location on the side of the body panel.

Models with factory installed threaded insert in body panel:

Thread 8mm Hex Bolt into threaded insert to clear paint as required, **(Figures 2 & 3)**.

trailfortress.com/rough-country-oval-nerf-steps-21001s

Large and small hole in side of body panel:
Remove the rubber plug from the larger hole, **(Figure 4)**. Select (1) 8mm Clip Nut. Slide the Clip Nut into the larger hole. Line up the threaded nut with the smaller hole, **(Figure 5)**.

3. Select (1) Mounting Bracket. **NOTE**: (5) Brackets are universal and will fit left or right side. Bolt the Mounting Bracket to the Clip Nuts and/or the factory threaded holes with (2) 8mm Hex Bolts, (2) 8mm Lock Washers and (2) 8mm Flat Washers, **(Figures 6 & 7)**. Snug but do not fully tighten the hardware.
4. Repeat **Steps 1—3** to install the (2) remaining driver side Brackets.
5. Select the driver/left sidebar. Carefully position the Driver Sidebar onto the (3) Mounting Brackets. **IMPORTANT**: Do not slide, (front to back or rotate), the Sidebar on the Brackets or damage to the finish on the Sidebar may result. Attach the Sidebar to the Mounting Brackets with (6) 8mm x 25mm Hex Bolts, (6) 8mm Lock Washers and (6) 8mm Flat Washers, **(Figure 8)**. Do not tighten hardware.
6. Level and adjust the Sidebar and tighten all hardware.
7. Move to the passenger side of the vehicle. On the passenger side, determine if the vehicle is equipped with a plastic diesel exhaust fluid (DEF) tank, **(Figures 9 & 10)**.
   Models without DEF tank, skip to Step 8.
   Models with DEF tank: The tank sits close to the side of the body. With specialized tools, the passenger front upper and lower Bracket can be installed but room is limited. It may be easier to drop the tank down to access the inner side of the body panel for upper bracket installation. Tank will not need to be removed, only dropped down for access to mounting location. **IMPORTANT**: If tank is full, it will be very heavy and assistance is highly recommended to avoid injury or damage to the vehicle or the tank. It is recommended that installation is performed when the DEF tank is low on fluid before dropping the tank.
   a. On models with plastic lower tray under tank, remove the (3) hex bolts attaching the tray to the frame, **(Figure 9)**, and remove the tray. **2017 2500/3500 models:** Remove the (4) hex bolts attaching the plastic cover to DEF tank, **(Figure 10A)** and remove plastic cover, **(Figure 10B)**.
   b. Release the tank filler hose. Release the plug for the sending unit on the top of the tank.
   c. Support the tank with a floor jack. Place a smooth flat surface, (wooden block for example), between the floor jack and the tank to avoid damaging the plastic tank. Do not push up on the tank; only support the weight of the tank with the jack.
   d. Remove the (2) bolts securing the tank straps to the vehicle, **(Figure 11)**. Tilt the straps to release from the brackets. Slowly lower the tank until the top of the tank is almost visible. Use blocks or stands to support the tank while installing the front Upper and Lower Brackets.
   e. Proceed to **Step 8.**
8. Locate the first tab on the edge of the pinch weld, **(Figures 2—4, 13 & 15)**. Select the Upper Bracket, **(Figure 12)**. Repeat **Steps 2 & 3** to attach the passenger front Upper Bracket to the side of the body panel, **(Figure 13)**. Do not tighten hardware at this time.
9. Line up the hole in the bottom of the Upper Bracket with the hole in the tab on the pinch weld.
   a. **Models with a weld-nut**: Slide the Bracket over the weld-nut, **(Figure 13)**. Attach the Lower Bracket to the bottom of the body and weld-nut with (1) 8mm x 25mm Hex Bolt, (1) 8mm Lock Washer and (1) 8mm Flat Washer, **(Figures 16 & 20)**. Leave loose at this time.
   b. **Models with flat tab and hole**: Insert the 8mm Bolt Plate down through the hole in the Upper Bracket and mounting tab, **(Figures 14 & 15)**. Attach the Lower Bracket to the bottom of the body and Bolt Plate with (1) 8mm Flat Washer and (1) 8mm Nylon Lock Nut, **(Figures 16 & 20)**. Leave loose at this time.
10. Line up the side tab on the Lower Bracket with the threaded hole in the side of the Upper Bracket. Attach the Lower Bracket to the Upper Bracket with (1) 8mm x 25mm Hex Bolt, (1) 8mm Lock Washer and (1) 8mm Flat Washer, **(Figure 20)**. Leave loose at this time.
11. Repeat **Steps 1—3** for the (2) remaining passenger side Bracket installations. **NOTE**: Cradles on Brackets installed on passenger side will face forward.
    a. **2017 2500/3500 DEF tank models:** Locate the 2nd tab bracket location along the bottom edge of the body, (pinch weld), **(Figure 17)**. Hold the DEF cover in place and mark the 2nd Bracket

trailfortress.com/rough-country-oval-nerf-steps-21001s

location onto the cover, **(Figure 18)**. Use a sharp knife or hacksaw blade to carefully cut a slot in the plastic cover to clear the 2nd Bracket, **(Figure 19)**. Remove as little plastic as possible.

12. Repeat **Steps 5 & 6** to install the passenger Sidebar, **(Figure 21)**.

13. Once the Sidebars are fully installed and all hardware fully tightened, reinstall the DEF tank and cover, if equipped, as described in **Step 7 & 11**.

14. Do periodic inspections to the installation to make sure that all hardware is secure and tight.

To protect your investment, wax this product after installing. Regular waxing is recommended to add a protective layer over the finish. Do not use any type of polish or wax that may contain abrasives that could damage the finish.
For stainless steel: Aluminum polish may be used to polish small scratches and scuffs on the finish. Mild soap may be used also to clean the Sidebar. **For gloss black finishes**: Mild soap may be used to clean the Sidebar.

Driver/Left Side Installation Pictured

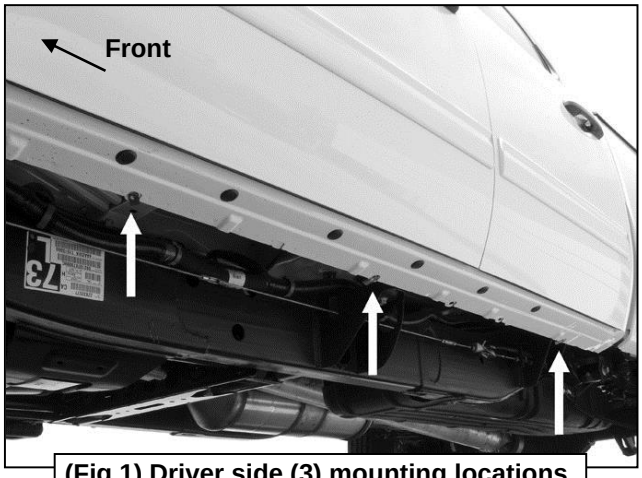

(Fig 1) Driver side (3) mounting locations

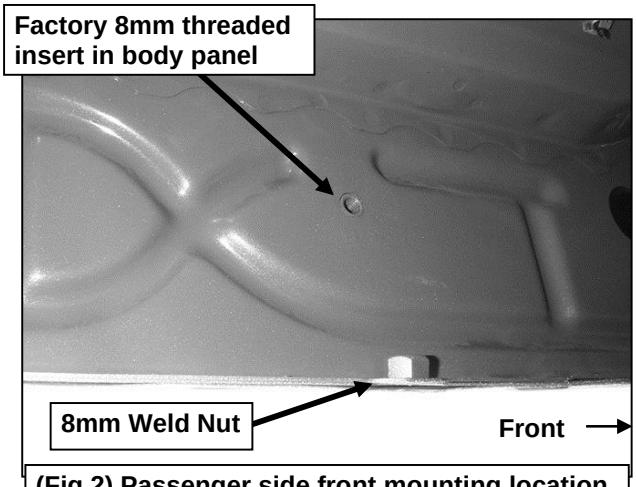

(Fig 2) Passenger side front mounting location

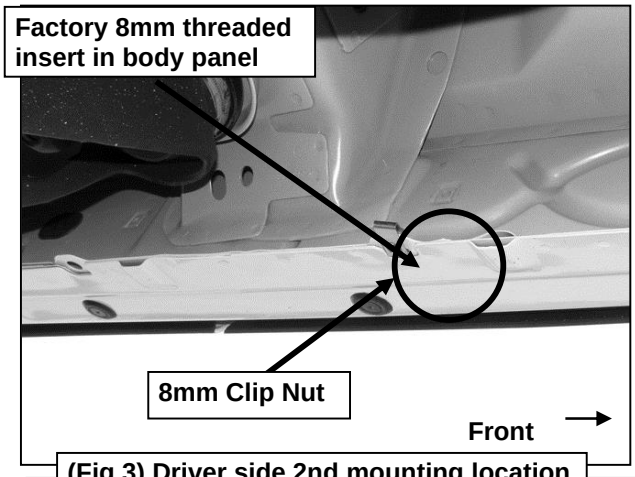

(Fig 3) Driver side 2nd mounting location

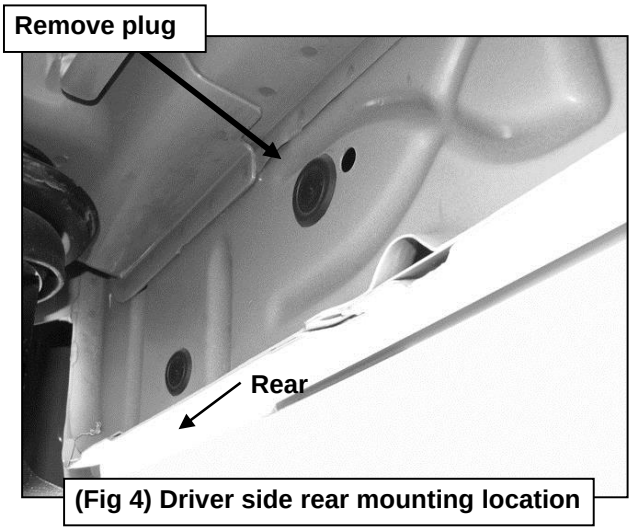

(Fig 4) Driver side rear mounting location

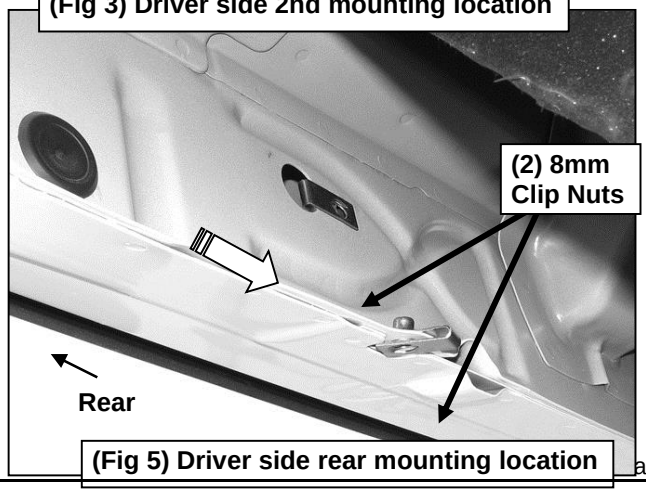

(Fig 5) Driver side rear mounting location

trailfortress.com/rough-country-oval-nerf-steps-21001s

Driver/Left Side Installation Pictured

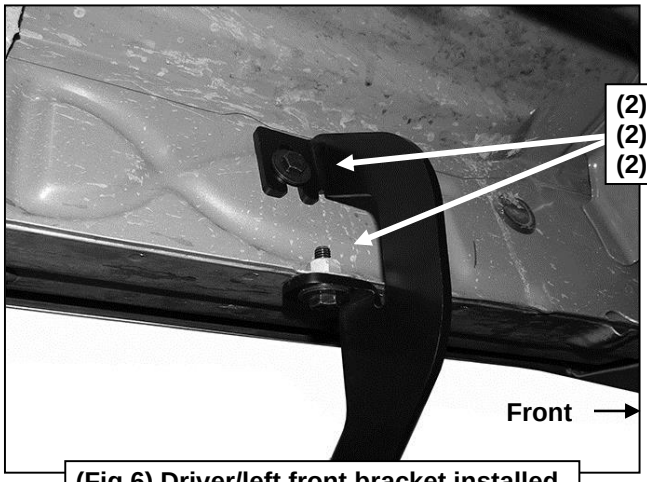

(Fig 6) Driver/left front bracket installed

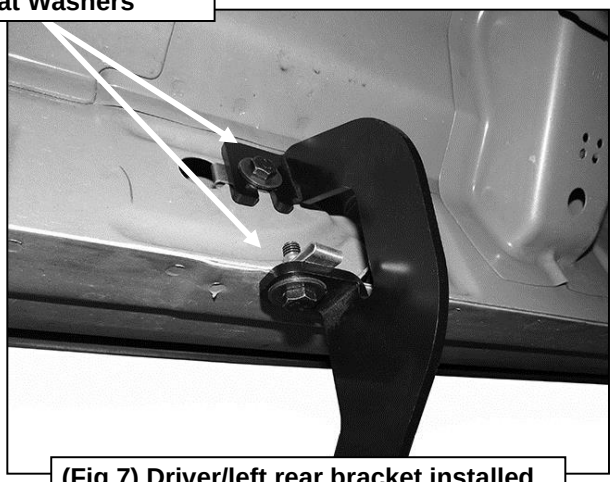

(Fig 7) Driver/left rear bracket installed

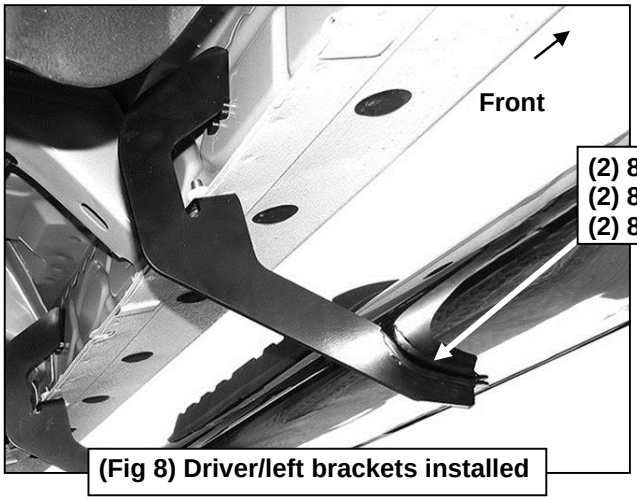

(Fig 8) Driver/left brackets installed

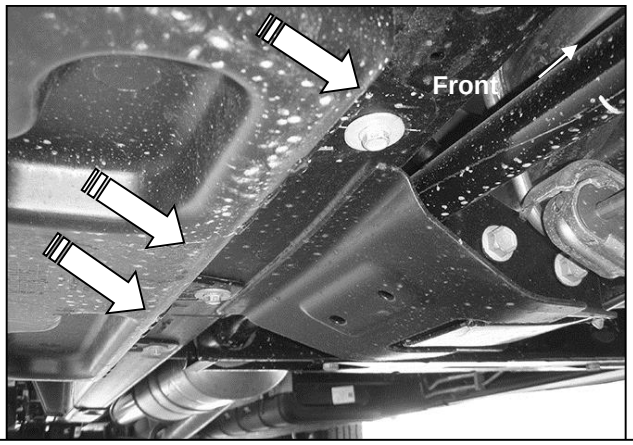

(Fig 9) 07-16 Passenger side front pictured with DEF tank cover. Remove (3) hex bolts to remove cover

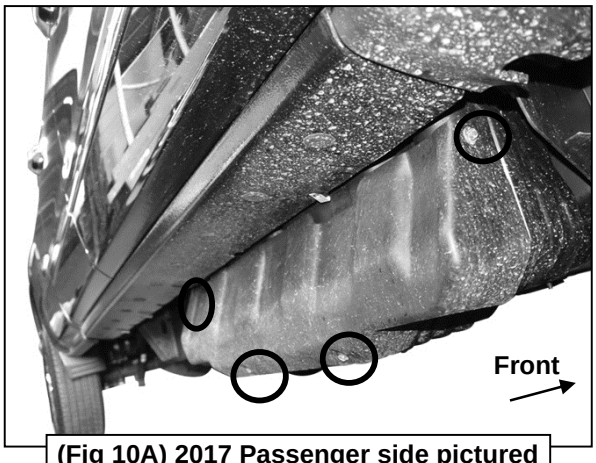

(Fig 10A) 2017 Passenger side pictured with DEF plastic tank cover. Remove (4) hex bolts to remove plastic cover



(Fig 10B) 2017 Passenger side DEF cover

trailfortress.com/rough-country-oval-nerf-steps-21001s

Passenger/right Side Installation Pictured

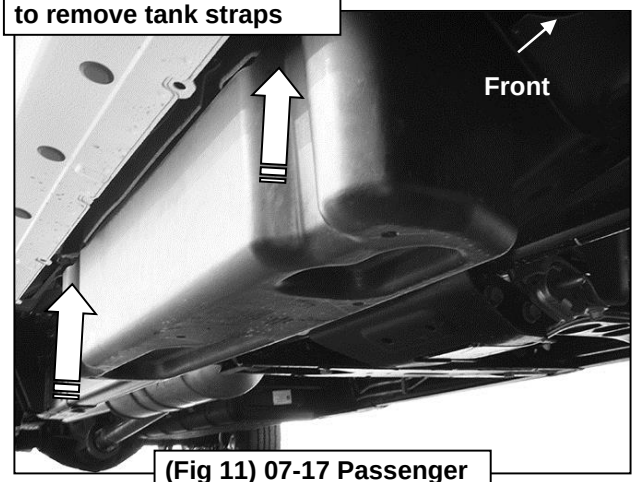

(Fig 11) 07-17 Passenger side DEF tank and cover



(Fig 12) Passenger/right Front Upper Bracket (all models)

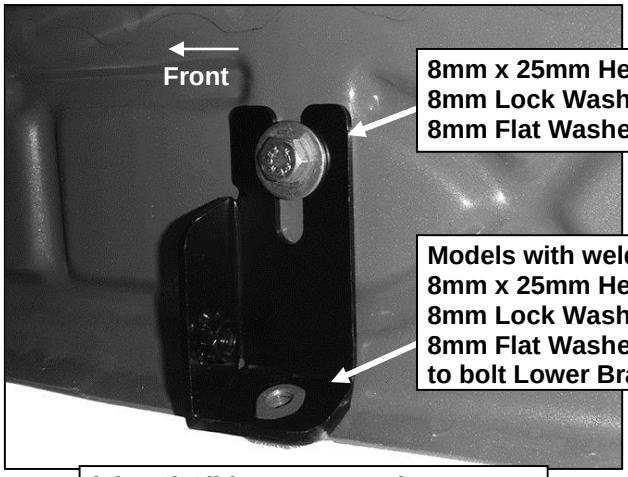

(Fig 13) Slide Upper Bracket over weld nut (if equipped-see Figure 2)



(Fig 14) 8mm x 35mm Bolt Plate

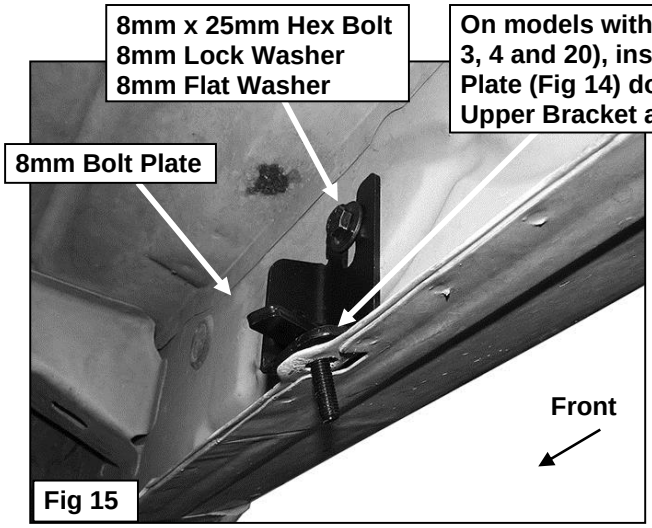



(Fig 16) Passenger/right Front Lower Bracket (all models)

trailfortress.com/rough-country-oval-nerf-steps-21001s

Passenger/Right Side Installation Pictured

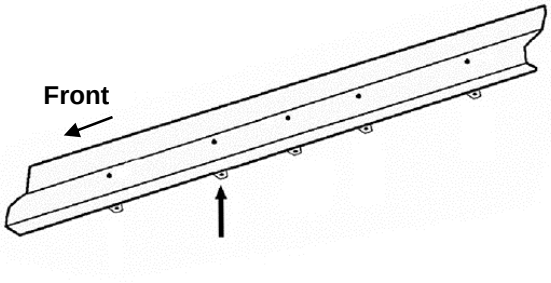

(Fig 17) Passenger side 2nd bracket location from back of body panel

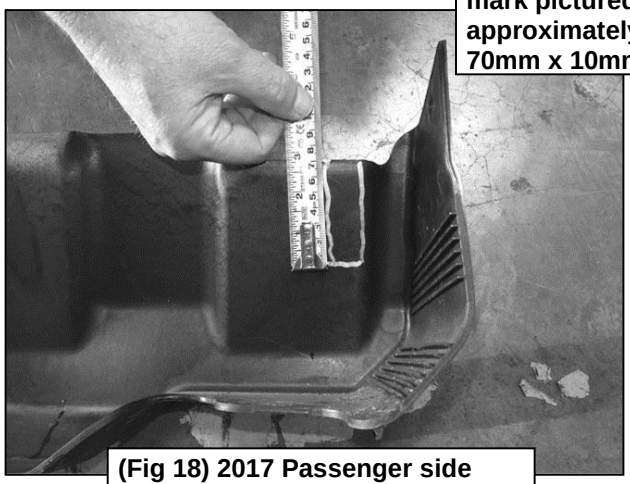

mark pictured is approximately 70mm x 10mm

(Fig 18) 2017 Passenger side DEF cover marked for trimming

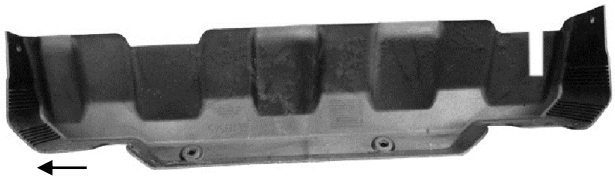

(Fig 19) 2017 Passenger side DEF cut for example only

Models with weld nut on tab use:
8mm x 25mm Hex Bolt
8mm Lock Washer
8mm Flat Washer
to bolt Lower Bracket to weld nut

On models with flat tab and 8mm Bolt Plate (see Fig. 15) use:
8mm Flat Washer
8mm Nylon Lock Nut
to attach Lower Bracket to Bolt Plate

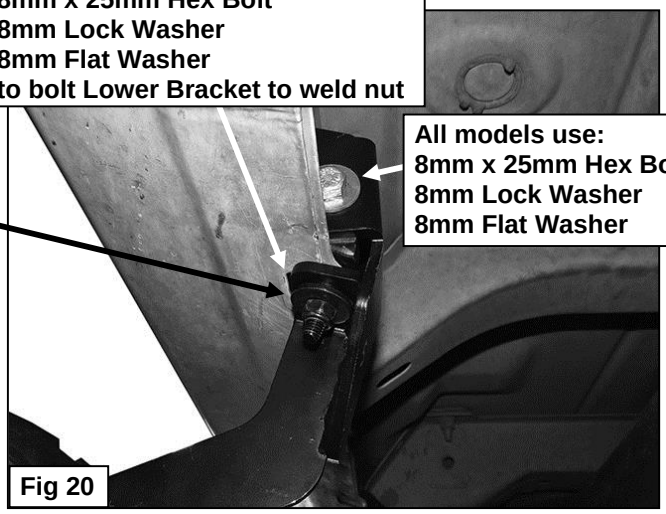

All models use:
8mm x 25mm Hex Bolt
8mm Lock Washer
8mm Flat Washer

Fig 20

(2) 8mm x 25mm Hex Bolts
(2) 8mm Lock Washers
(2) 8mm Flat Washers



(Fig 21) Passenger side installation pictured

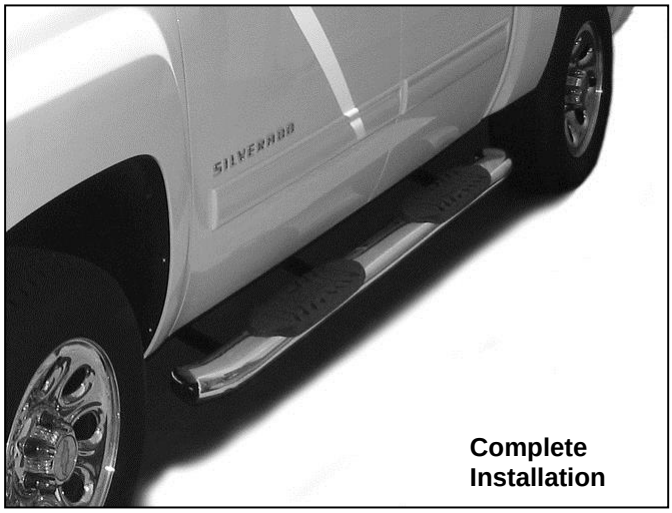

Complete Installation

trailfortress.com/rough-country-oval-nerf-steps-21001s