Rough Country 19331RED Installation Instructions

3.5-Inch Lift Kit with Red Control Arms for Tahoe & Suburban

Part number: 19331RED

trailfortress.com/3-5-inch-lift-kit-tahoe-suburban-rough-country-19331red

Scan for fitment, price and install help

ROUGH COUNTRY
SUSPENSION SYSTEMS®

GM 2007-15 Tahoe, Yukon and Suburban 1500 4WD 3.5” LIFT KIT - Steel Knuckles

Thank you for choosing Rough Country for your suspension needs.

Rough Country recommends a certified technician install this system. In addition to these instructions, professional knowledge of disassemble/reassembly procedures as well as post installation checks must be known. Attempts to install this system without this knowledge and expertise may jeopardize the integrity and/or operating safety of the vehicle.

Please read instructions before beginning installation. Check the kit hardware against the parts list on the rear cover of these instructions. Be sure you have all needed parts and know where they go. Also please review tools needed list and make sure you have needed tools.

PRODUCT USE INFORMATION

⚠WARNING As a general rule, the taller a vehicle is, the easier it will roll. Seat belts and shoulder harnesses should be worn at all times. Avoid situations where a side rollover may occur. Generally, braking performance and capability are decreased when larger/heavier tires and wheels are used. Take this into consideration while driving. Do not add, alter, or fabricate any factory or after-market parts to increase vehicle height over the intended height of the Rough Country product purchased. Mixing component brands is not recommended.

Rough Country makes no claims regarding lifting devices and excludes any and all implied claims. We will not be responsible for any product that is altered. If question exist we will be happy to answer any questions concerning the design, function, and correct use of our products.

⚠NOTICE The electric power steering must be unplugged before any of the steering components are removed. Failure to do so may cause damage to the electric power steering.
Vehicles with a mass damper on the front diff, the damper will have to be removed.

This kit is packaged as a leveling kit—raising the front 3.5” and the back 1.75”. If you desire a different look or if the vehicle has a tool box or added weight in the rear, please consult with your sales representative about other coil spring spacer options.

This suspension system was developed using a 32 x 11.5 tire with factory wheels. Examples of tire sizes that we suggest are 285/65R18, 285/55R20, or 285/45R22. **Note** if wider tires are used, offset wheels will be required and trimming may be required.

⚠NOTICE NOTICE TO DEALER AND VEHICLE OWNER

Any vehicle equipped with any Rough Country product should have a “Warning to Driver” decal installed on the inside of the windshield or on the vehicle’s dash. The decal should act as a constant reminder for whoever is operating the vehicle.

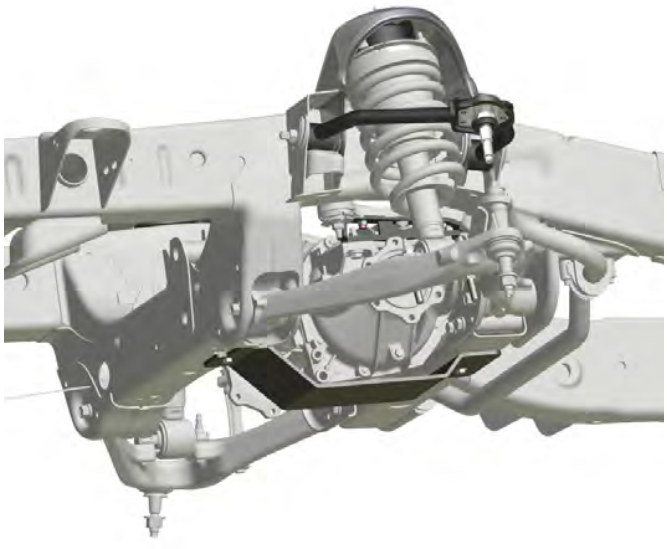

Torque Specs:

Size	Grade 5	Grade 8
5/16”	15 ft/lbs	20 ft/lbs
3/8”	30 ft/lbs	35 ft/lbs
7/16”	45 ft/lbs	60 ft/lbs
1/2”	65 ft/lbs	90 ft/lbs
9/16”	95 ft/lbs	130 ft/lbs
5/8”	135 ft/lbs	175 ft/lbs
3/4”	185 ft/lbs	280 ft/lbs

	Class 8.8	Class 10.9
6MM	5 ft/lbs	9 ft/lbs
8MM	18ft/lbs	23 ft/lbs
10MM	32ft/lbs	45ft/lbs
12MM	50ft/lbs	75ft/lbs
14MM	85ft/lbs	120ft/lbs
16MM	130ft/lbs	165ft/lbs
18MM	170ft/lbs	240ft/lbs

Tools Needed:

18MM Wrench
15MM Wrench
21MM Wrench
11MM Wrench
10MM Wrench
Floor Jack
Jack stands
Strut Compressor
Die Grinder

trailfortress.com/3-5-inch-lift-kit-tahoe-suburban-rough-country-19331red