Rough Country 18901RED Installation Instructions

3.5-Inch Lift Kit with Red Control Arms for Sierra Denali

Part number: 18901RED

trailfortress.com/3-5-inch-lift-kit-sierra-denali-rough-country-18901red

Scan for fitment, price and install help

ROUGH COUNTRY SUSPENSION SYSTEMS®

1189BAG5

2014-16 4WD GM 1500 Denali w/ Magneride 3.5” Front 1.75” Rear Lift Kit

Thank you for choosing Rough Country for your suspension needs.

Rough Country recommends a certified technician install this system. In addition to these instructions, professional knowledge of disassemble/reassembly procedures as well as post installation checks must be known. Attempts to install this system without this knowledge and expertise may jeopardize the integrity and/or operating safety of the vehicle.

Please read instructions before beginning installation. Check the kit hardware against the parts list on the rear cover of these instructions. Be sure you have all needed parts and know where they go. Also please review tools needed list and make sure you have needed tools.

PRODUCT USE INFORMATION

⚠WARNING As a general rule, the taller a vehicle is, the easier it will roll. Seat belts and shoulder harnesses should be worn at all times. Avoid situations where a side rollover may occur. Generally, braking performance and capability are decreased when larger/heavier tires and wheels are used. Take this into consideration while driving. Do not add, alter, or fabricate any factory or after-market parts to increase vehicle height over the intended height of the Rough Country product purchased. Mixing component brands is not recommended.

Rough Country makes no claims regarding lifting devices and excludes any and all implied claims. We will not be responsible for any product that is altered. If question exist we will be happy to answer any questions concerning the design, function, and correct use of our products.

⚠NOTICE ****Note** This kit will not fit trucks with aluminum arms and knuckles.**

****Note** The electric power steering must be unplugged before any of the steering components are removed. Failure to do so may cause damage to the electric power steering.**

****Note**** Trucks with a mass damper on the front diff, the damper will have to be removed.

This kit is packaged as a leveling kit—raising the front 3.5” and the back 1.75”. If you desire a different look or if the vehicle has a tool box or added weight in the rear, please consult with your sales representative about other block and u-bolt options.

This suspension system was developed using a 32 x 11.5 tire with factory wheels. Examples of tire sizes that can be used are 285/75R17, 285/65R18, or 285/55R20. **Note** if wider tires are used, offset wheels will be required and trimming may be required.

NOTICE TO DEALER AND VEHICLE OWNER

⚠NOTICE Any vehicle equipped with any Rough Country product should have a “Warning to Driver” decal installed on the inside of the windshield or on the vehicle’s dash. The decal should act as a constant reminder for whoever is operating the vehicle.

Tools Needed:

- 18MM Wrench
- 15MM Wrench
- 21MM Wrench
- 11MM Wrench
- 10MM Wrench
- Floor Jack
- Jack stands
- Strut Compressor
- Die Grinder

Torque Specs:

Size	Grade 5	Grade 8
5/16”	15 ft/lbs	20 ft/lbs
3/8”	30 ft/lbs	35 ft/lbs
7/16”	45 ft/lbs	60 ft/lbs
1/2”	65 ft/lbs	90 ft/lbs
9/16”	95 ft/lbs	130 ft/lbs
5/8”	135 ft/lbs	175 ft/lbs
3/4”	185 ft/lbs	280 ft/lbs

	Class 8.8	Class 10.9
6MM	5 ft/lbs	9 ft/lbs
8MM	18ft/lbs	23 ft/lbs
10MM	32ft/lbs	45ft/lbs
12MM	50ft/lbs	75ft/lbs
14MM	85ft/lbs	120ft/lbs
16MM	130ft/lbs	165ft/lbs
18MM	170ft/lbs	240ft/lbs

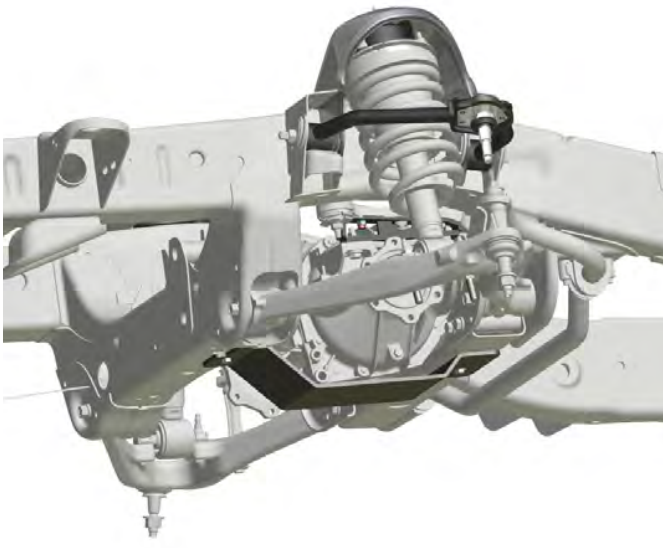

trailfortress.com/3-5-inch-lift-kit-sierra-denali-rough-country-18901red

FRONT INSTALLATION

1. Park the vehicle on a level surface and chock the rear wheels.
2. Jack up the front of the vehicle. Place jack stands under the frame rails and lower onto jack stands letting the front suspension hang.
3. Remove the tires and wheels. Remove the 6 bolts holding the factory skid plate using a 15mm socket. Unplug the three connectors going to the electric power steering. **See Photo 1**.
4. Retain factory hardware and front skid plate for reuse.
5. Using a 21mm wrench, remove the tie-rod nut as shown in **Photo 2**. Strike the front of the mount to dislodge the tie rod end. Remove from the knuckle.

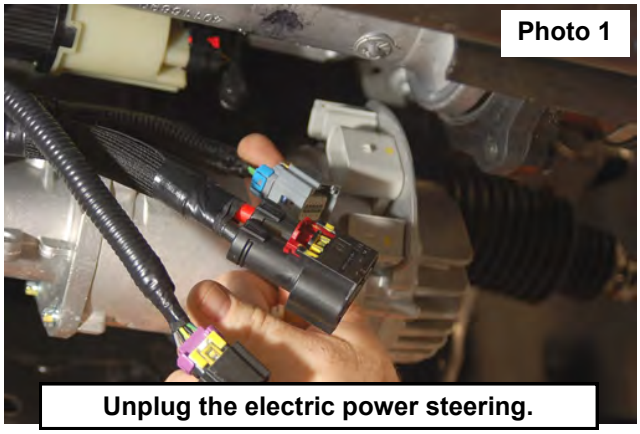

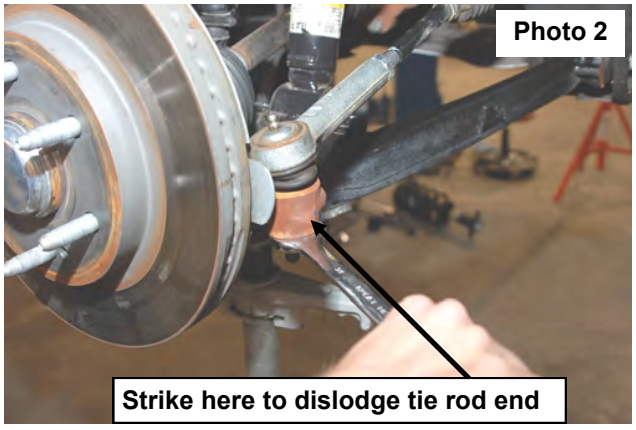

6. Remove the sensor wire from the plastic clip. Remove the brake line bracket from the control arm using a 10mm wrench. **See Photo 3.** Using a 10mm wrench disconnect the Magnaride linkage from the upper control arm.
7. Remove and unplug the ABS sensor wire from the frame as shown in **Photo 4**.

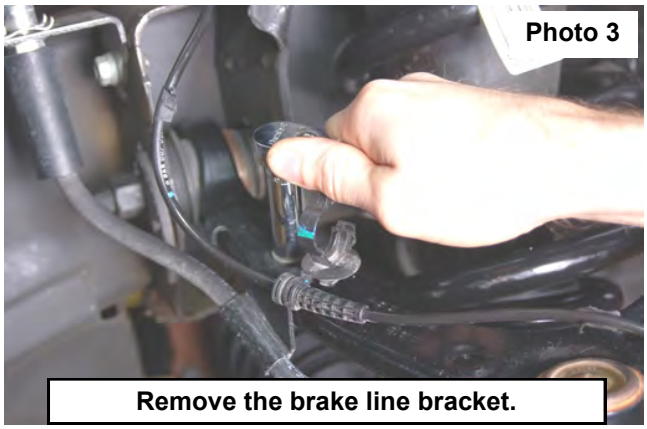

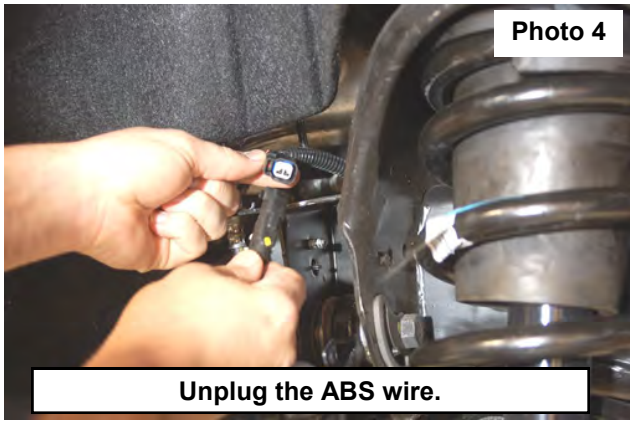

8. Remove sway bar link with 15mm socket and wrench. Place jack stand under knuckle for support and then remove upper ball joint nut using a 18mm wrench. **See Photo 5**. Strike the knuckle as shown to dislodge the ball joint. Separate the upper control arm from the knuckle.
9. Using a 18mm wrench, remove the upper strut nuts as shown in **Photo 6**. Retain factory hardware for reuse.



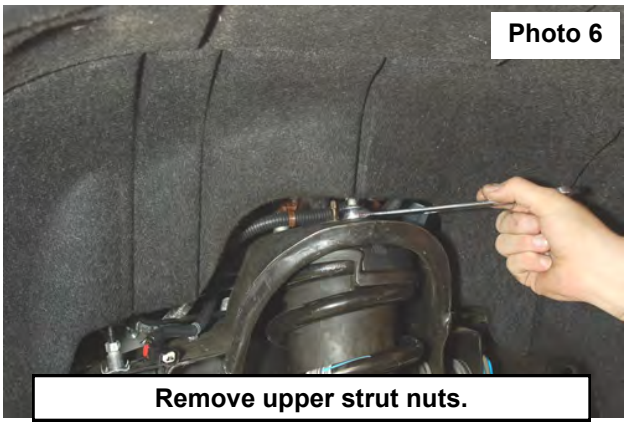

10. Using a 15mm wrench, remove the 2 bolts securing the lower strut mount to the lower control arm and remove the strut from the vehicle. **See Photo 7.**
11. Mark location of alignment cams on upper control arms to allow installation of new arm to same position. Using a 21mm wrench and 21mm socket, remove the upper control arms from the vehicle. **See Photo 8**. Retain the hardware.

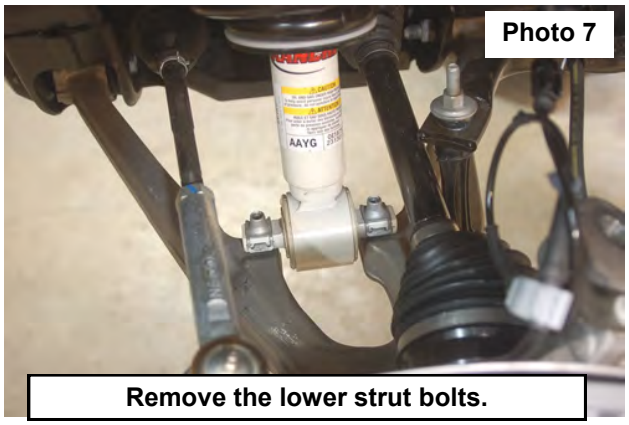

Remove the lower strut bolts.



Remove stock upper control arm.

12. Using a 18mm socket and wrench remove the four bolts holding in the factory cross member. Retain factory hardware.
13. Use a jack stand to support the front diff. Remove the 4 bolts holding the diff mounts to the frame with a 15mm and 18mm wrench.
14. Lower the jack stand and pull down on the front of the diff to allow enough room to slide the two 1” diff drop spacers into place. Use the supplied 7/16” x 4.5” bolts, lock washers, and nuts from 275BAG6. Repeat this process to install 1” spacers in the rear diff mounts, as well. Tighten using 16mm and 18mm socket and wrench. Tighten with a 16mm and 18mm socket and wrench. **See Photo 9.**
15. On the driver side of the factory cross member measure from the end of the tube and make marks at 4.5” and 8” on the front side as shown in **Photo 10**. Measure 1/4” for the bottom, and 2” from the back side and mark.



Place diff. drops between diff. mounts and frame.



Measure and mark factory rear crossmember.

16. Using a die grinder and cut across the marks as shown in **Photo 11.**
17. Using a die grinder, grind the cooling fins on the diff. Hold the cross member into place and check clearance between the cross member and front diff. **See Photo 12.**



Cut factory rear crossmember.

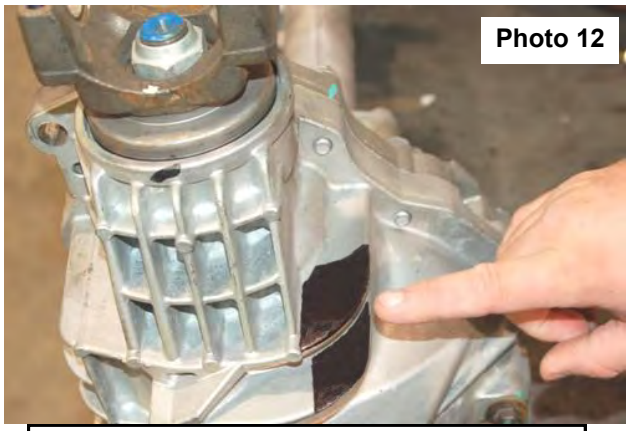

Mark diff. fins and cut/grind.

18. Insert factory hardware into the stock cross member and tighten with a 18mm socket and wrench. **See Photo 13.**
19. Place the supplied 10mm x 70mm bolts into the hex shaped holes in the strut spacer facing upward. **See Photo 14.**



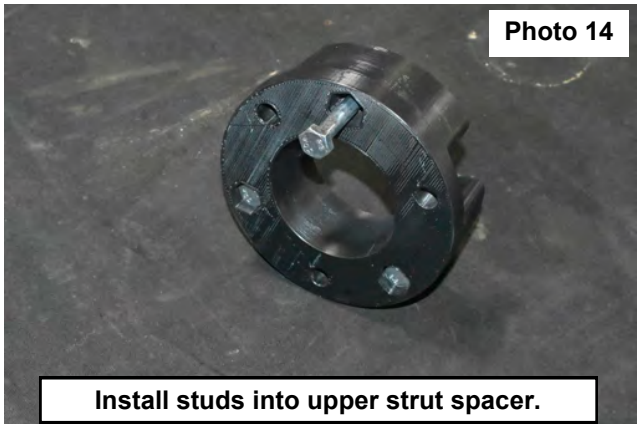

20. Place the strut spacer on top of the strut and tighten with the supplied 10mm lock nuts and flat washers and a 17mm socket. **See Photo 15.**
21. Install the strut assembly in the factory mount with the supplied 10mm flange lock nuts. Tighten using a 17mm wrench. **See Photo 16.**

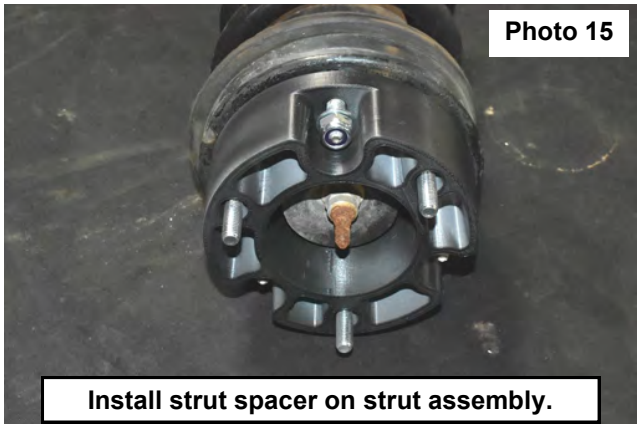

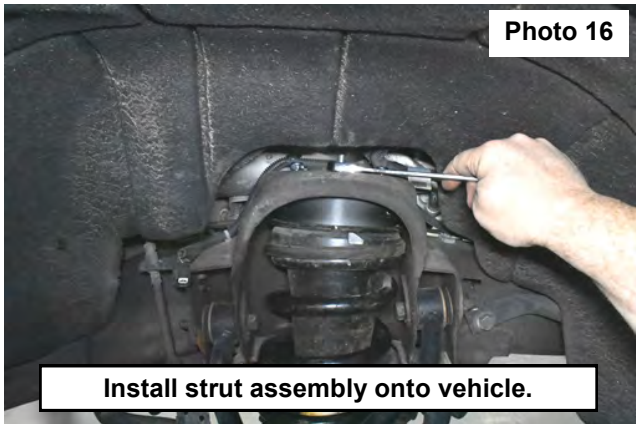

22. Install the strut in the lower control arm using supplied 3/8” x 2.25” bolts, washers, and nuts. **See Photo 17.** It may be necessary to jack up the lower control arm with a floor jack to align lower strut holes.
23. Reinstall the sway bar on the lower control arm using a15mm wrench.

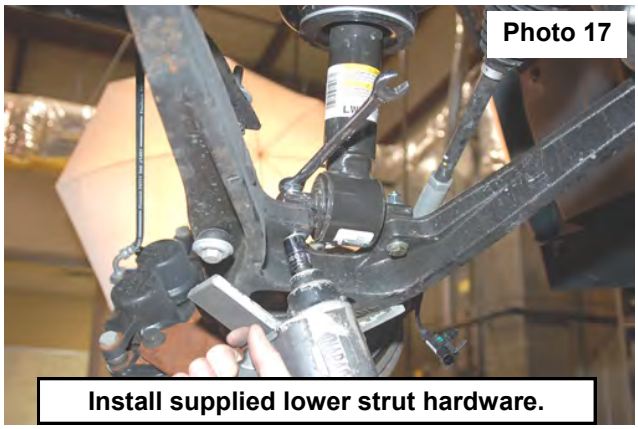

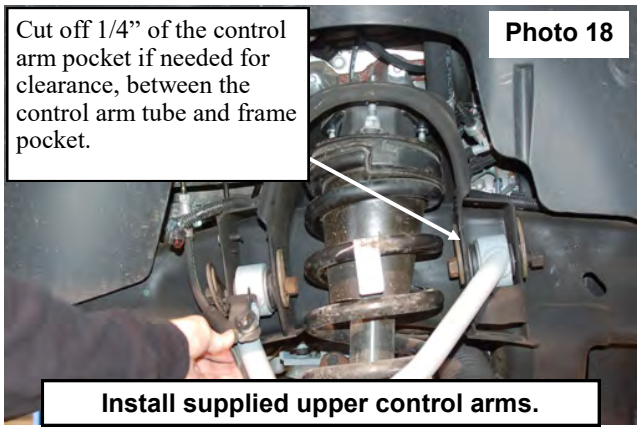

24. Install the supplied control arm with factory hardware. Reinstall the knuckle to the upper control arm with the supplied castle nuts/cotter pins. Tighten using 3/4” wrench to **50 ft/lbs. DO NOT OVER-TORQUE THE CASTLE NUT**. Reinstall the tie rod end into the knuckle with factory hardware and using a 21mm wench.
25. Install the brake line bracket on the new control arm with the supplied 1/4” lock nut / washer and using a 7/16” wrench. **See Photo 18**. **Driver side shown.**
26. Reconnect the ABS wire that was disconnected.
27. Locate and install the new lower skid plate below the differential in the factory location with the factor hardware and using a 15mm wrench. **See Photo 19.**
28. Using the supplied bracket and 6mm hardware from 188BAG, attach the Magneride linkage as shown in **Photo 20.** Tighten using a 10mm wrench.

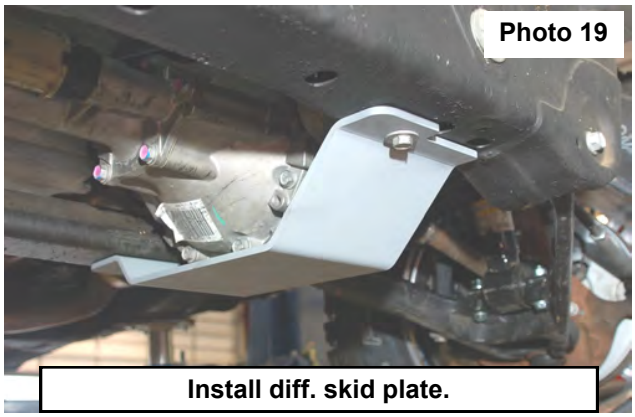

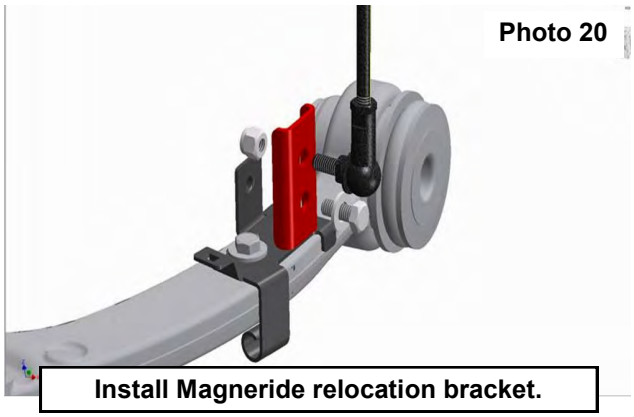

29. Reconnect the three connectors going to the electric power steering.
30. Reinstall the wheels/tires.
31. Jack up the vehicle and remove the jack stands.
32. Lower the vehicle to the ground.

REAR INSTALLATION

1. Chock the front wheels.
2. Place a floor jack under the differential and jack up the rear of the vehicle.
3. Place jack stands under the frame rails and lower onto the jack stands.
4. Remove the tires/wheels.
5. Remove the factory shock absorbers using a 21mm wrench & socket. Retain the factory hardware for reuse.
6. Remove the factory u-bolts using a 21mm socket, then remove the factory blocks.
4. Remove the MagneRide shim and flatten tab. Reinstall on bottom of leaf pack. **See Photo 1.**
5. Lower the axle using the floor jack to allow for the new 3" block to be installed. **Larger end to the rear of the truck.**
6. Install the block on the factory spring pad with the flat part of the block on the spring and the thinner end towards the front. Jack up the axle to meet the springs, making sure to align the center pin. **See Photo 2.**
7. With the floor jack applying slight pressure to the rear axle to keep the pin aligned, install the new supplied u-bolts and tighten in a crossing pattern, using a 7/8" socket.
8. Using the supplied sleeves, bolts, and washers from 1189BAG2, install the shock relocation brackets. **See Photo 3.**
9. Install the tires/wheels.
10. Jack up the vehicle to remove the jack stands. Remove the jack stands and lower the vehicle to the ground.

Photo 1

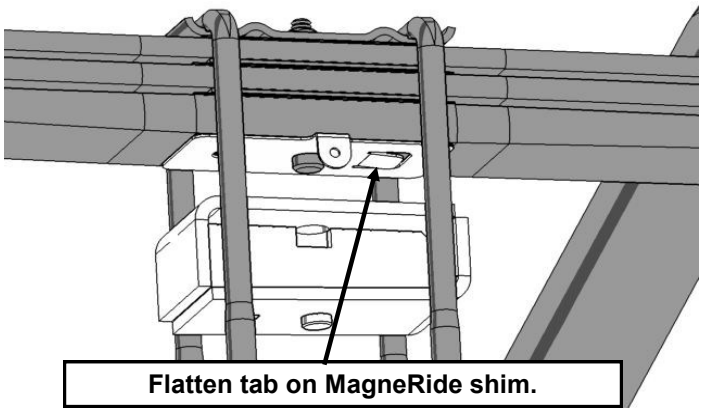

Flatten tab on MagneRide shim.

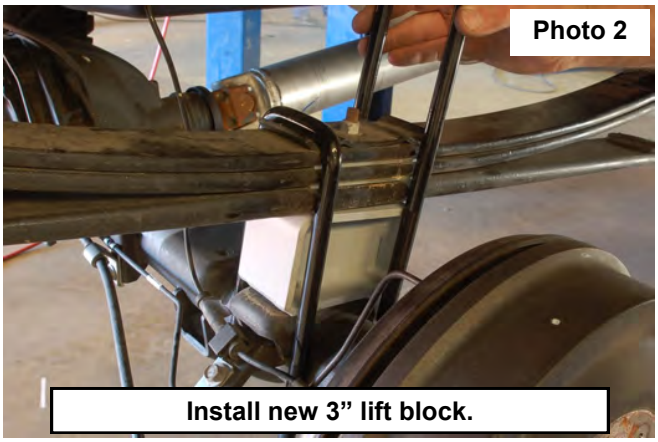

Photo 2

Install new 3" lift block.

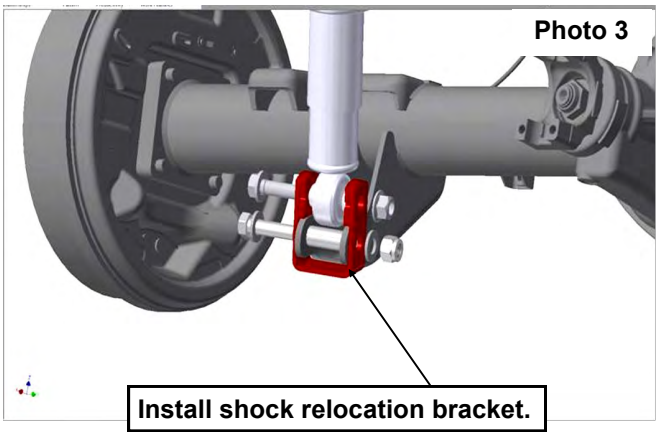

Photo 3

Install shock relocation bracket.

POST INSTALLATION INSTRUCITONS

1. Lightly grease the ball joints. Do not over grease the ball joint as this could cause ball joint boot failure.
2. Have a qualified alignment center align the vehicle immediately.
3. Have headlights adjusted to proper settings.
4. Wheels must be retighten at 50 miles.
5. All kit components must be retightened at 500 miles and then every three thousand miles after installation. Periodically check hardware for tightness.
6. Install "Warning to Driver" decal on sun visor.
7. On some vehicles the front lower skirting will need to be trimmed if using certain wheel /tire combinations and with heavy offset wheels. Trim only as needed.

Box Kit

- 1-Driver Side Control Arm
- 1-Pass Side Control Arm
- 4-Diff Spacers
- 1-Diff Lower Skid Plate
- 2-Strut Spacers
- 4-9/16" x 10 1/2" U-bolts
- 2-3" spacer blocks
- 2-Rear Shock Absorbers
- 1-9/16Bag
- 1-275Bag3
- 1-1277Bag6
- 1-275Bag6
- 1-10MMStudbag-1
- 1-1189Bag2
- 1-188Bag

9/16Bag

- 8-9/16 Nylock Nuts
- 8-9/16 Washers

275Bag3

- 4-10mm x 65mm Bolts
- 8-3/8" Washers
- 4-10mm Nylock Nuts

275Bag6

- 4-7/16" x 4.5" Bolts
- 4-7/16" Lock Washers
- 4-7/16" Nuts
- 2-1/4" Nylocks
- 4– 7/16" Flat Washers

1277Bag6

- 4-3/8" x 2.25" Bolts
- 4-10mm x 65mm Bolts
- 8-3/8' Washers
- 4-3/8" Lock Nuts
- 4-10mm Lock Nuts

1189Bag2

- 2-14mm x 100mm Bolts
- 2-9/16" x 1.75" Sleeves
- 2-14mm Nylock Nuts
- 2-9/16" Washers

19920Bag1

- 6-10mm x 70mm Bolts
- 6-10mm Flange Lock Nuts
- 7-10mm Hex Lock Nut
- 6-10mm Flat Washers

188Bag

- 2-Frt Magneride Linkage Brackets
- 2-6mm x 16mm Bolts
- 2-6mm Nylock Nuts

KIT CONTENT



Thank you for choosing Rough Country for your suspension needs.

By purchasing any item sold by Rough Country, LLC, the buyer expressly warrants that he/she is in compliance with all applicable , State, and Local laws and regulations regarding the purchase, ownership, and use of the item. It shall be the buyers responsibility to comply with all Federal, State and Local laws governing the sales of any items listed, illustrated or sold. The buyer expressly agrees to indemnify and hold harmless Rough Country, LLC for all claims resulting directly or indirectly from the purchase, ownership, or use of the items.