TRAIL FORTRESS

BUILT FOR THE TRAIL. CHECKED FOR YOUR TRUCK.

Rough Country 18201 Installation Instructions

6-Inch Lift Kit for Aluminum-Arm GMC Sierra 1500 Denali 4WD

Part number: 18201

trailfortress.com/6-inch-lift-kit-aluminum-arm-gmc-sierra-1500-denali-4wd-rough-country-18201

Scan for fitment, price and install help

ROUGH COUNTRY SUSPENSION SYSTEMS®

183BAG3

2014-18 4WD GM 1500 Denali w/ MagneRide 6” Knuckle Kit

Thank you for choosing Rough Country for your suspension needs.

Rough Country recommends a certified technician install this system. In addition to these instructions, professional knowledge of disassemble/reassembly procedures as well as post installation checks must be known. Attempts to install this system without this knowledge and expertise may jeopardize the integrity and/or operating safety of the vehicle.

Please read instructions before beginning installation. Check the kit hardware against the parts list on the rear cover of these instructions. Be sure you have all needed parts and know where they go. Also please review tools needed list and make sure you have needed tools.

PRODUCT USE INFORMATION

⚠WARNING As a general rule, the taller a vehicle is, the easier it will roll. Seat belts and shoulder harnesses should be worn at all times. Avoid situations where a side rollover may occur. Generally, braking performance and capability are decreased when larger/heavier tires and wheels are used. Take this into consideration while driving. Do not add, alter, or fabricate any factory or after-market parts to increase vehicle height over the intended height of the Rough Country product purchased. Mixing component brands is not recommended.

Rough Country makes no claims regarding lifting devices and excludes any and all implied claims. We will not be responsible for any product that is altered. If question exist we will be happy to answer any questions concerning the design, function, and correct use of our products.

⚠WARNING The electric power steering must be unplugged before any of the steering components are removed. Failure to do so may cause damage to the electric power steering.

⚠NOTICE Trucks equipped with a mass damper on the front diff, the damper will have to be removed.

This kit is packaged as a leveling kit. If you desire a different look or if the vehicle has a tool box or added weight in the rear, please consult with your sales representative about other block and u-bolt options.

The 6” suspension system was developed using a 295/60-20 tire with 20” x 9” wheel and a offset of –12mm to +18mm. If wider tires are used, offset wheels will be required and trimming may be required.

⚠NOTICE **Important note: Please refer to the instructions on the last page for trimming the tie rods. For alignment purposes, it will be necessary to trim/shorten the tie rod end to allow the front end alignment to be set properly.**

⚠NOTICE **DEALER AND VEHICLE OWNER**

Any vehicle equipped with any Rough Country product should have a “Warning to Driver” decal installed on the inside of the windshield or on the vehicle’s dash. The decal should act as a constant reminder for whoever is operating the vehicle of its unique handling characteristics. INSTALLING DEALER - it is your responsibility to install the warning decal and forward these installation instructions on to the vehicle owner for review. These instructions should be kept in the vehicle for its service life.

Tools Needed:

Floor Jack /Jack Stands
8mm Allen Socket
10mm socket /wrench
11mm socket /wrench
13 mm socket/wrench
15mm socket / wrench
17mm socket/wrench
18mm socket /wrench
21mm socket /wrench
22mm socket /wrench
24mm socket /wrench
19mm socket /wrench
35mm socket
1/2” socket/wrench
9/16” socket /wrench
#30 Torx bit
Reciprocating Saw
Drill
9/16” Drill Bit
Hand Grinder

Torque Specs:

Size	Grade 5	Grade 8
5/16”	15 ft/lbs	20 ft/lbs
3/8”	30 ft/lbs	35 ft/lbs
7/16”	45 ft/lbs	60 ft/lbs
1/2”	65 ft/lbs	90 ft/lbs
9/16”	95 ft/lbs	130 ft/lbs
5/8”	135 ft/lbs	175 ft/lbs
3/4”	185 ft/lbs	280 ft/lbs

Size	Class 8.8	Class 10.9
6MM	5 ft/lbs	9 ft/lbs
8MM	18ft/lbs	23 ft/lbs
10MM	32ft/lbs	45ft/lbs
12MM	55ft/lbs	75ft/lbs
14MM	85ft/lbs	120ft/lbs
16MM	130ft/lbs	165ft/lbs
18MM	170ft/lbs	240ft/lbs

trailfortress.com/6-inch-lift-kit-aluminum-arm-gmc-sierra-1500-denali-4wd-rough-country-18201

KIT CONTENT

6” Kit



6” Kit

1229Box1

- Front Cross Member-1
- Rear Cross Member-1

183Box1

- Diff Drop Driver-1
- Diff Drop Passenger-1
- Diff Drop Center-1
- Cross Member Diff Mount-1
- E-brake Bracket-1
- Rear Brake Line Bracket-1
- CV Spacer-2
- Rear Shocks-2
- Sway Bar Brackets-2
- Skid Plate-1
- 1229Bag2-1
- 1272Bag3-1
- 1229Bag3-1
- 1290Bag6-1
- 183Bag2- 1
- 183Bag1- 1

184Box1

- Strut Spacers-2
- 10MMStudbag-1-1
- 9/16Bag-1
- Antiwrap Rear Block-2
- U-bolts-4
- 1263Bag2-1
- 1227Bag1-1
- 183Bag1-1

1237Box1

- Driver Knuckle-1
- Passenger Knuckle-1

6” Kit Bags

183Bag1
- Instruction Sheet-1
- Warning to Driver Sticker-1

1229Bag2
- 14mm x 85mm Bolt-1
- 14mm Nylock-1
- 9/16” Washer-2
- 10mm x 65mm SHCS-12
- 12mm x 45mm Bolt-4
- 12mm Flange Nut-4
- 1/2” x 1”.0 Bolt-2
- 1/2” Lock Nut-2
- 3/16” Vent Hose-1
- 3/16” Coupler-1

1229Bag3
- 5/8” x 4.5” Bolts-2
- 5/8” Washers-8
- 5/8” Nylock Nuts-4
- 5/8” x 5.5” Bolts-2

1272Bag3
- 10mm x 65mm SCHS- 12

1290Bag6
- 10mm x 35mm Bolts-4
- 10mm Nylock Nuts-4
- 3/8” Washers-4
- 5/16” x 1” Bolts-5
- 5/16” Toplock Nuts-5
- 5/16’ Washers-10

10mmStudbag-1
- 3/8” Stud-6
- 3/8” Lock Washer-6
- 3/8” Nut-6

183Bag2
- Magneride Shock Brkt Washer- 2
- 14mm x 85mm HHCS- 2
- 14mm Nylock Nuts- 2
- 14mm Washers- 4
- 1/2” x 1.5” HHCS- 2
- 1/2” Flat Washer- 2

9/16Bag
- 9/16” Nylock Nut- 8
- 9/16” Washer- 8

1263Bag2
- 7/16” x 3.125” x 3.25” Ubolts- 4
- 7/16” Washers- 8
- 7/16 Nylock Nuts- 8

FRONT INSTALLATION

1. Park the vehicle on a level surface and chock the rear wheels. Raise the hood and disconnect the battery using a 10mm socket. Lock the steering wheel in the straight position.
2. Jack up the front of the vehicle. Place jack stands under the frame rails and lower onto jack stands letting the front suspension hang.
3. Remove the tires and wheels. Remove the 6 bolts holding the factory skid plate using a 15mm socket. Unplug the two connectors going to the electric power steering wiring harness behind the front skid plate. **See Photo 1**.
4. Remove and unplug the ABS sensor wire from the frame as shown in **Photo 2.**

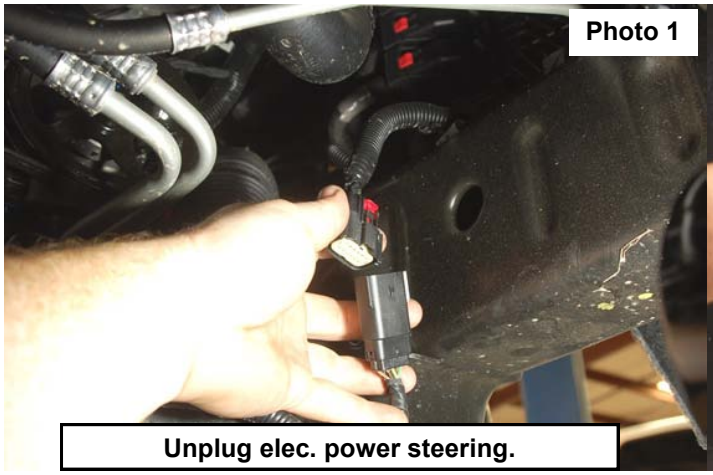

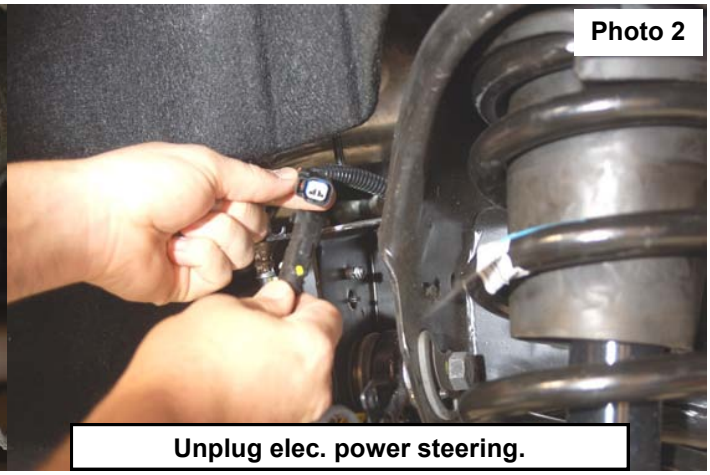

5. Remove the sensor wire from the plastic clip. Remove the brake line bracket from the control arm using a 10mm wrench. **See Photo 3.** Next remove the brake line bracket from the control arm pocket with a 13mm wrench.
6. Using a 21mm wrench, remove the tie-rod nut as shown in **Photo 2**. Strike the front of the mount to dislodge the tie rod end. Remove from the knuckle.

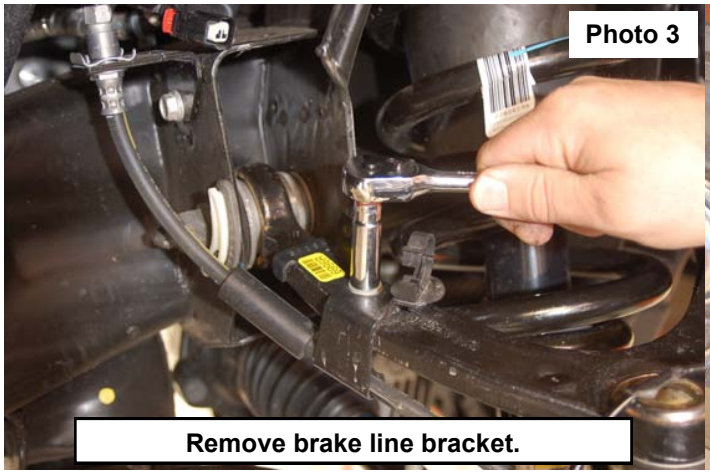



7. Remove the brake caliper using a 18mm socket. Hang the caliper out of the way and remove the rotor using a 30 torx socket. **See Photo 5.**
8. Use a 10mm socket to remove the ABS bracket from the top side of the knuckle.
9. Remove the dust cap and then remove the axle nut using a 35mm socket.

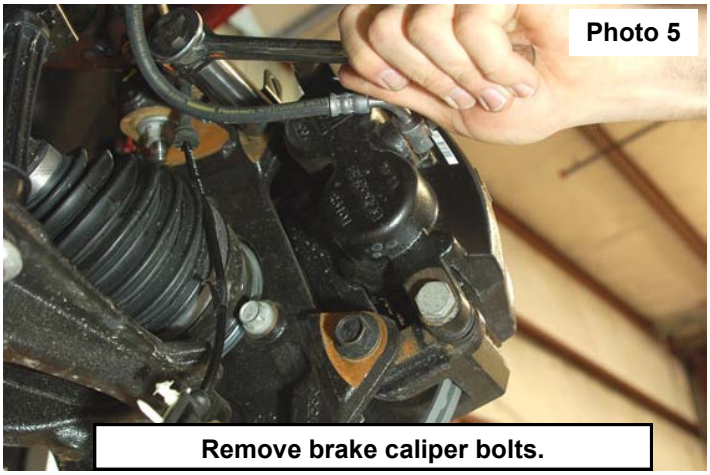

10. Remove the upper ball joint using a 18mm socket and separate using a hammer and striking the knuckle on the side as shown in **Photo 6.**
11. Remove the lower ball joint using a 24mm socket and separate with a hammer as shown in **Photo 7**. Next remove the knuckle from the truck.



Strike knuckle to remove upper ball joint.

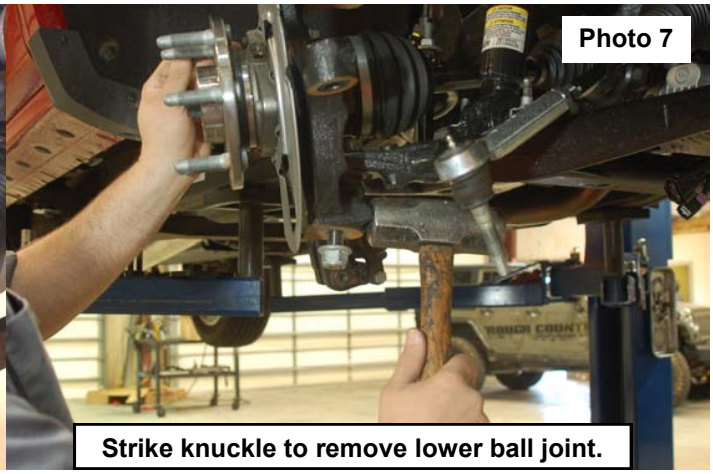

Strike knuckle to remove lower ball joint.

12. Using a 15mm wrench and socket remove the sway bar links from the truck. **See Photo 8.**
13. Remove the lower strut bolts using a 15mm socket as shown in **Photo 9** and remove the upper strut nuts using a 18mm wrench. Remove the strut from the truck.

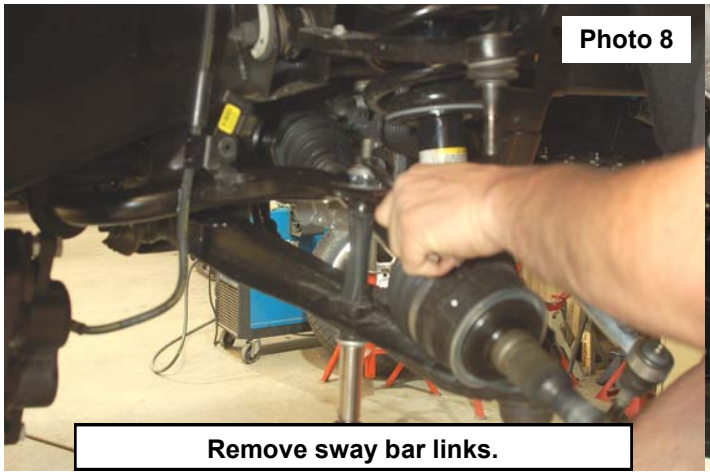

Remove sway bar links.

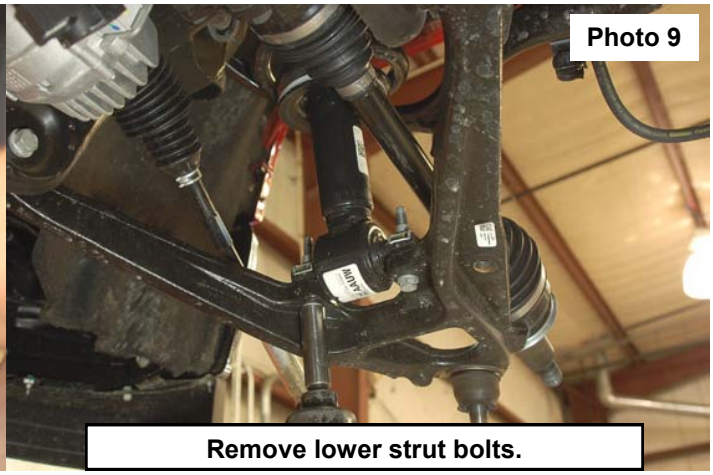

Remove lower strut bolts.

14. Remove CV axle bolts using a 15mm socket. **See Photo 10.**
15. Using a 10mm socket remove the sway bar from the bottom of the frame. **See Photo 11.**

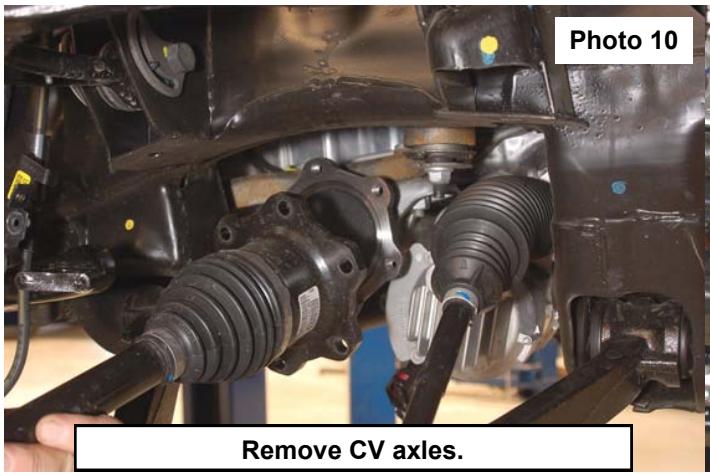

Remove CV axles.



Remove sway bar.

16. Remove the lower control arm using a 18mm wrench and a 24mm socket. **See Photo 12.**
17. Using a 18mm wrench and socket remove the factory lower rear cross-member. **See Photo 13.**

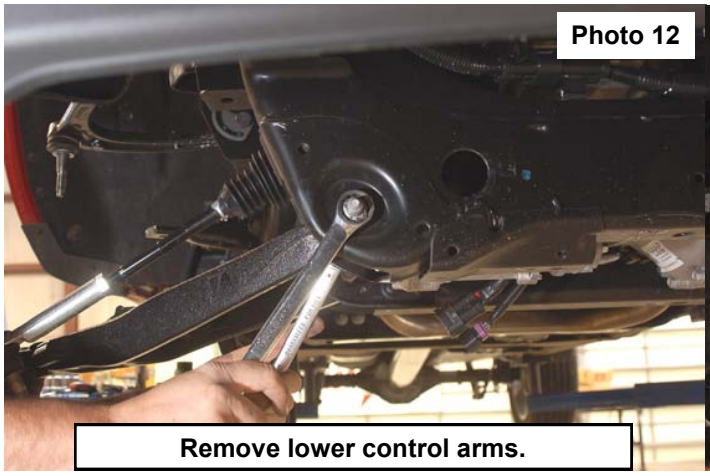

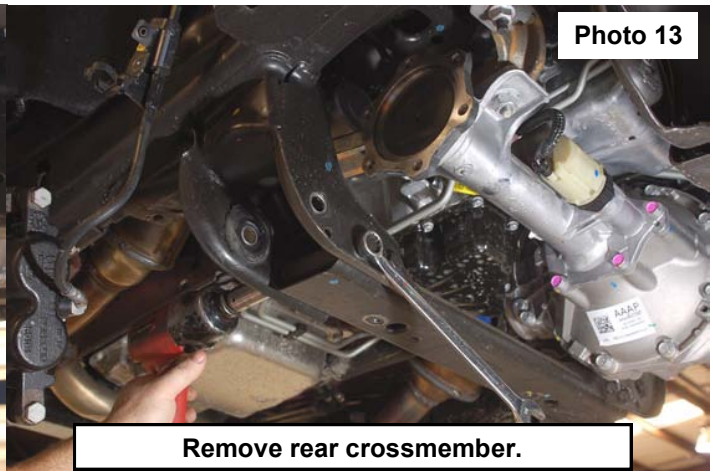

18. Using a 11mm socket remove the driveshaft from the front diff . **See Photo 14.** Unplug the actuator wire from diff, remove wire loom from diff, and remove vent tube from diff.
19. Make sure the steering wheel is straight, mark the steering shaft and pinion shaft as shown in **Photo 15.** Use a 11mm socket to remove the connecting bolt. With a jack support the rack and pinion, using a 24mm and 18mm socket remove the bolts form the rack and pinion mounts. Carefully lower the rack and pinion down making sure no wires are in harms way. Now you can remove the diff, use a 18mm and 21mm socket remove the bolts from diff. lower diff from truck.



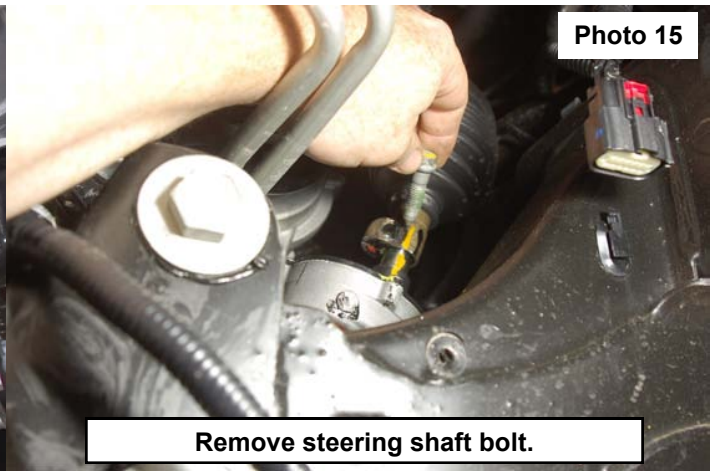

20. Mark the front and rear sides of the driver and passenger side rear control arm pocket, measure 3 3/8” from the end and cut off the factory crossmember mount. **See Photo 16 & 17.**

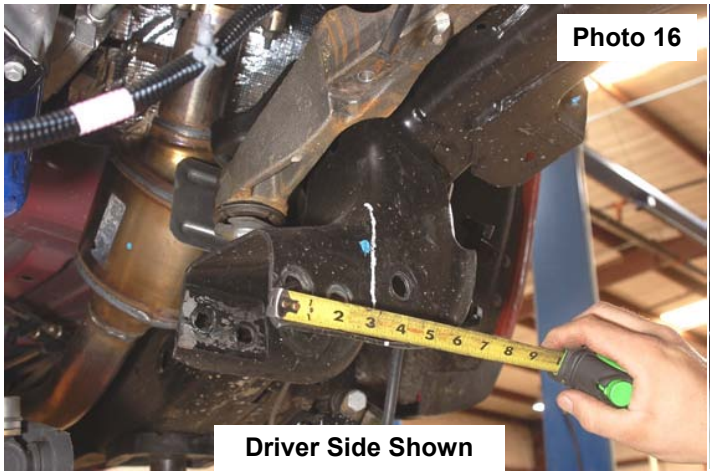



21. On the driver and passenger side rear control arm pocket cut the front lip off flush with the pocket 1.0” passed the control arm hole . Sand edges and paint to prevent rust. **See Photo 18.**
22. On the passenger side of the diff cut the front ear off using a saw-zall or cut off wheel. Cut flush with the flat areas on the diff and grind smooth. **See Photo 19.**





23. Re-install the rack and pinion with factory hardware using a 24mm and 18mm sockets. Make sure to align the marks on the steering shaft. Install the passenger side diff drop bracket with the supplied 12mm flange locks on the factory studs. Tighten with a 18mm wrench. **See Photo 20.**
24. Install the driver side diff drop bracket with the factory bolts and tighten with a 18mm socket. **See Photo 21.**





25. Install the diff using the supplied 12mm bolts and flange nuts on the driver side and 12mm bolts with stock nuts on the passenger side. Do not tighten at this time.
26. Install front crossmember using new 5/8” x 4.5” bolts, washer, and nuts. Hand tighten. **See Photo 22.**
27. Install center diff drop mounting bracket using the supplied 1/2” x 1.0” bolts and nuts to the front crossmember. Tighten with a 19mm socket and wrench. **See Photo 23.**

Photo 22



Install front crossmember.

Photo 23

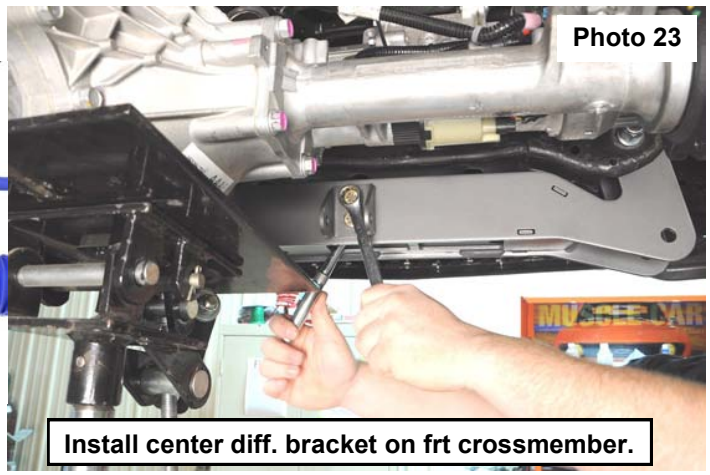

Install center diff. bracket on frt crossmember.

28. Remove the 3 bolts on the diff as shown in **Photo 24**. Next install the center diff bracket with the 3 factory bolts remove earlier and attach the bracket to the diff mount with the supplied 14mm x 85mm bolt, washers, and lock nut. Tighten using 18mm, 19mm, and 21mm socket and wrenches. **See Photo 24.**
29. After installing the diff, torque all diff bolts. **See Photo 25**. Make sure the diff on the passenger side clears the rack and pinion and no wires are pinched between the diff and the rack. Plug in the vent tube extension and the 4x4 actuator.

Photo 24

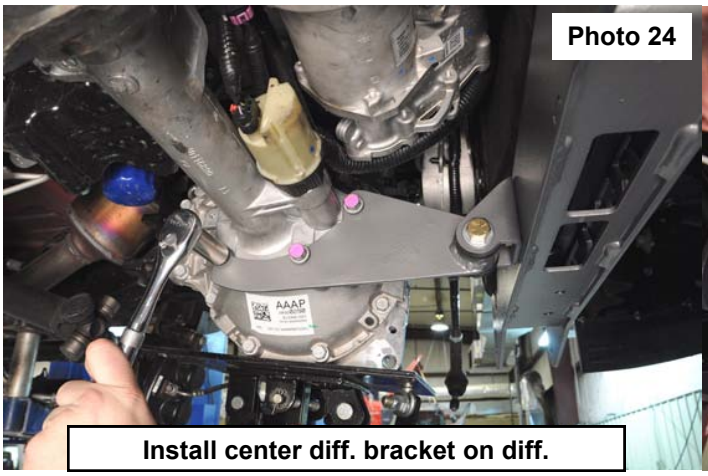

Install center diff. bracket on diff.

Photo 25

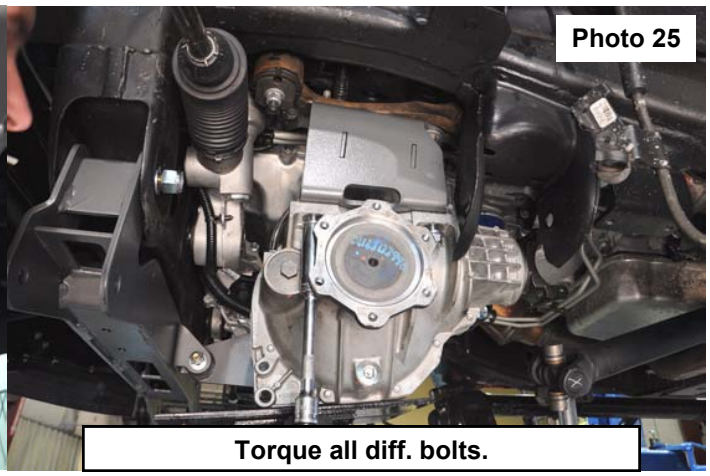

Torque all diff. bolts.

30. Install the driveshaft using stock hardware and a 11mm wrench to tighten. **See Photo 26.**
31. Install the rear crossmember with the supplied 5/8” x 5.5” bolts. Hand tighten.
32. Install the factory lower control arm with stock hardware. Hand tighten. Now tighten the 5/8” bolts that secures the crossmembers to the frame with a 24mm wrench. **See Photo 27.**

Photo 26



Install driveshaft.

Photo 27

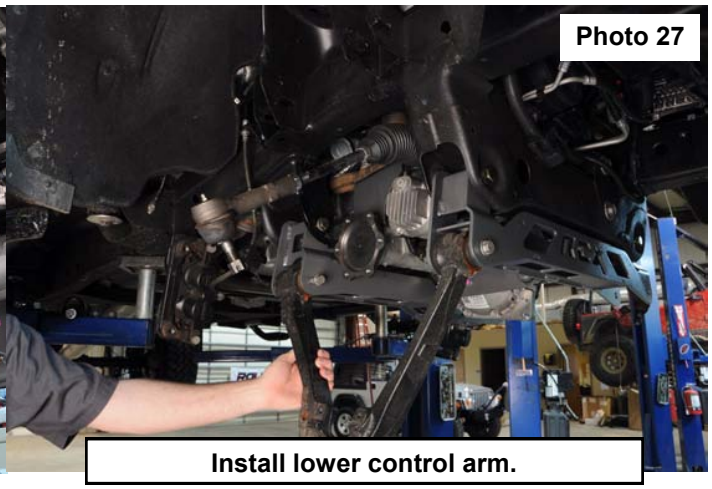

Install lower control arm.

33. Install sway-bar drop bracket using 10mm x 35 mm bolts and washers. Tighten using 17mm wrench. **See Photo 28.** Install sway-bar using stock bolt with new 10mm nuts. **See Photo 29.** Use a 10mm socket and 17mm wrench to tighten. Install stock sway-bar link using a 15mm to tighten. **Torque to 35ft-lbs.**

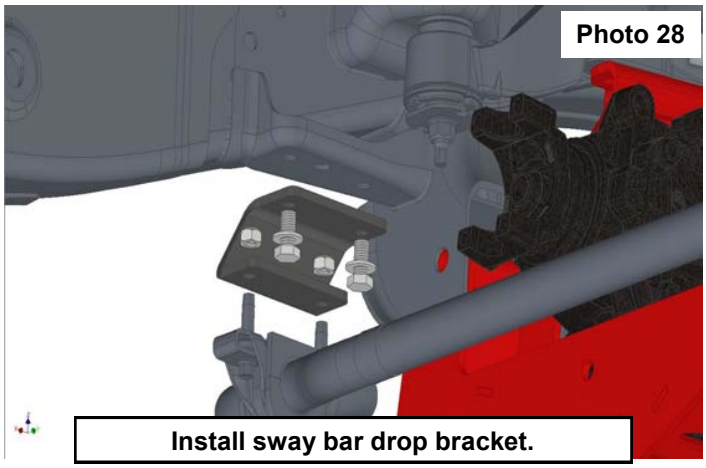

Install sway bar drop bracket.

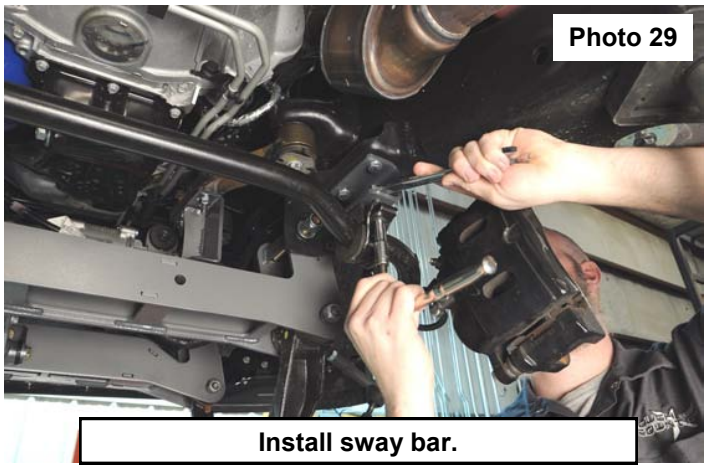

Install sway bar.

34. Install the CV spacer as shown in **Photo 30** between the axle shaft and the differential. Secure with the supplied 10mm x 65mm allen head bolts with a 8mm allen socket to tighten. **Torque to 35ft-lbs.**
35. Install sway bar link relocation bracket on the end of the sway bar with supplied 5/8" hardware from 1170BAG2. ****Notice, sway bar end is either round or square. Bracket can be flipped to match factory sway bar end.** See Photo 31. Torque to 175ftlbs.**

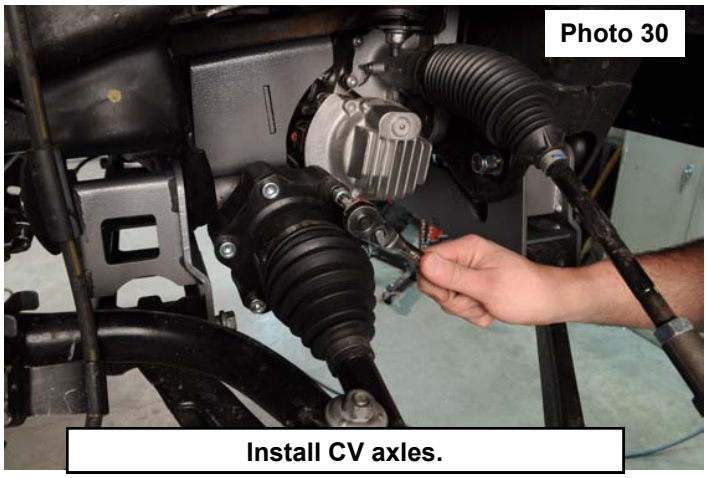

Install CV axles.

Photo 31

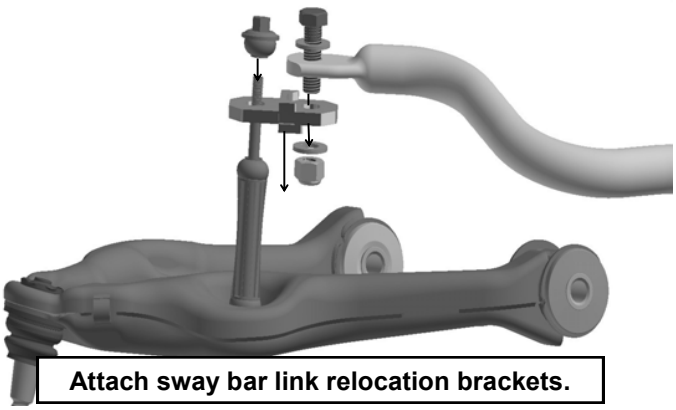
Attach sway bar link relocation brackets.

35. On the factory knuckles, remove the bearing assembly using a 15mm wrench. Next the brake shroud must be trimmed to allow the caliper to install on the new knuckle. Mark the dust shroud as shown in **Photo 32** and trim. Install the factory bearing and dust shroud into the new supplied knuckle. Tighten with a 15mm wrench. **See Photo 33. Torque to factory specs.**

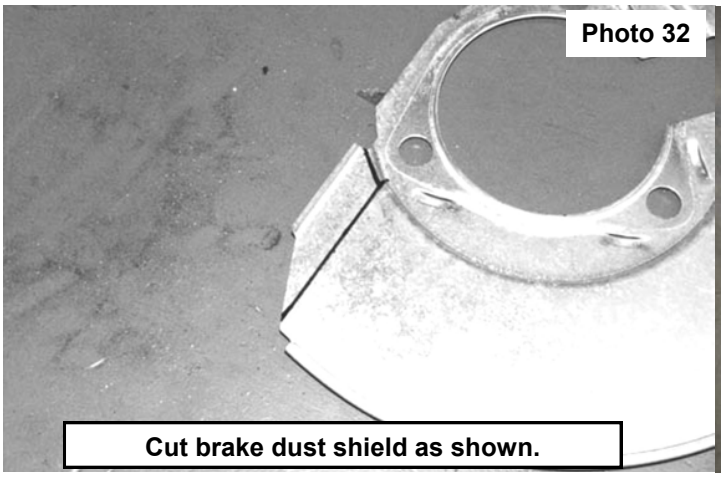

Cut brake dust shield as shown.

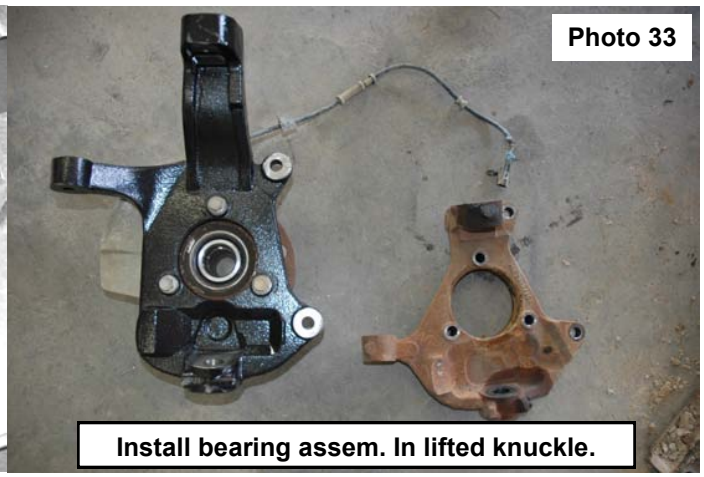

Install bearing assem. In lifted knuckle.

37. Install brake line drop bracket to the frame using stock hardware. Next secure factory brake line mount to the new drop bracket using the supplied 3/8” x 1” bolts, washers, and nuts. **See Photo 34.** Use a13mm wrench and socket to tighten. **Torque to 35ft-lbs.**
38. Using a strut compressor, disassemble the strut and place the preload spacer between the coil isolator and the lower coil seat. Reassemble strut using a strut compressor. **See Photo 35.**

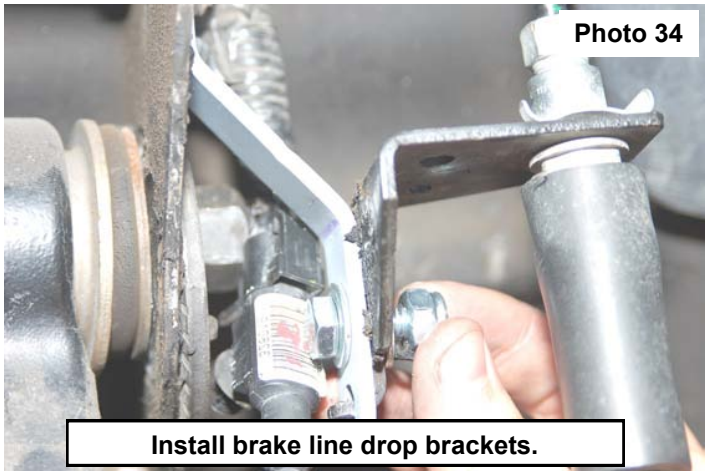

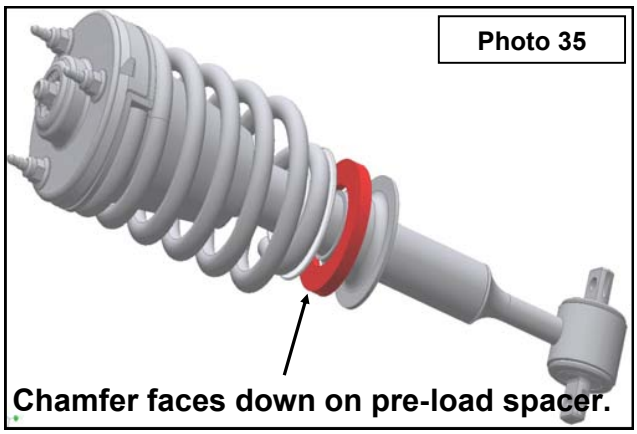

39. Press in the 10mm studs into the strut spacer. Install strut spacer on to strut using stock hardware and a 18mm wrench to tighten.
40. Install strut into truck using the supplied 10mm nuts and lock washers. Use a 9/16” wrench to tighten. **See Photo 36.** Use stock hardware for lower strut mount and use a 15mm wrench to tighten lower strut bolts. **Torque to factory specs.**
41. Remove the ABS wire from the brake line clip and remove the brake line from the bracket using a flat head screw driver and trim as shown in **Photo 37**. Reinstall the modified bracket on the stock control arm with the stock hardware and reinstall the ABS wire in the clip.



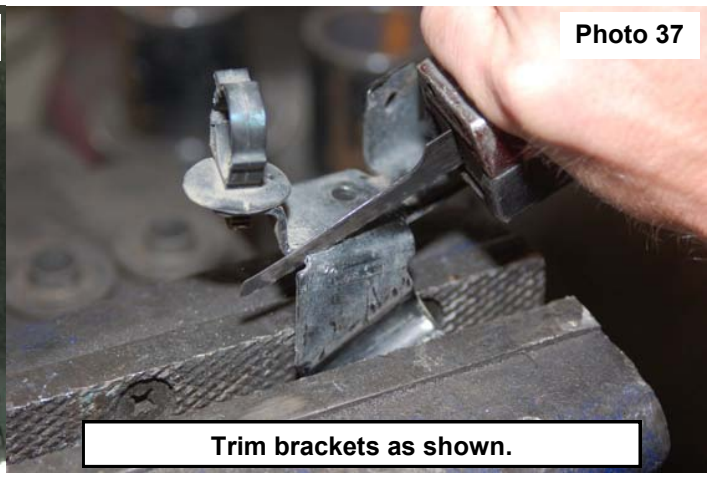

42. Install knuckles using stock hardware. **See Photo 38.** Use a 24mm for lower ball joint a 18mm for upper joint and a 35mm for axle nut. Install rotor and install bolt using a 30mm torx socket. Install the brake caliper using a 18mm socket for the bolts. **Torque to factory specs. Refer to Tie Rod trimming instructions on template page of this instruction booklet.**
43. Install skid plates using supplied 3/8" x 1.25" bolts and washers. **See Photo 38.** Use a 14mm socket to tighten all bolts. **Torque to 35ft-lbs.**
44. Install the wheels and tires, them jack up the truck and remove the jack stands. Lower truck on ground tighten upper and lower control arm bolts using 21mm for upper and 18mm and 24mm socket and wrench for bottom. **Torque to factory specs.**



Install lifted knuckles.

REAR INSTALLATION

1. Chock the front tires.
2. Before jacking up the rear of the vehicle. Remove the stock brake line bracket using a 13mm wrench, from the driver side frame rail to allow the extension bracket to be installed. Also remove the clip securing the hard line and wiring hardness to the top of the frame. **See Photo 1.** The stock bolts can be accessed from the side of the vehicle. Retain the stock hardware for reuse.
3. Install the brake line bracket to the new bracket with the supplied 5/16" x 3/4" bolts, nuts /washers. Reinstall the assembly in the stock location with the stock hardware using a 13mm wrench. **See Photo 2.**



Remove rear brake line bracket.

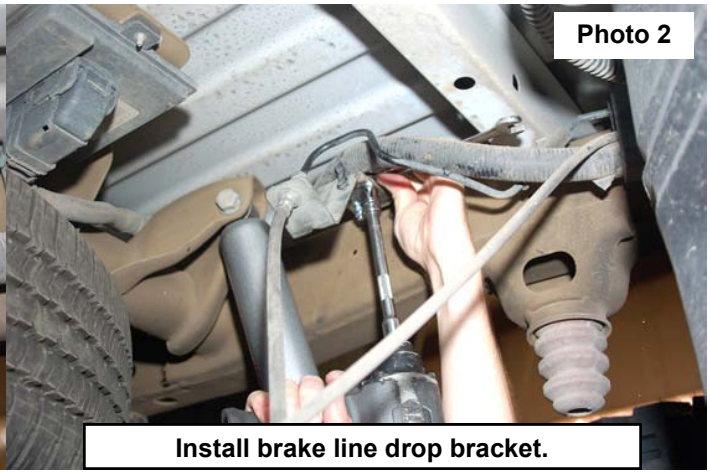

Install brake line drop bracket.

4. Remove the e-brake wire bracket from the frame with a 13mm socket. Use the supplied drop bracket and the factory bolt to mount to the frame. Use the supplied 5/16" x 1" bolt, washers, and nut to mount factory wire bracket to the new drop bracket as shown in **See Photo 3.**
5. Remove the ABS wire, if equipped, from the frame rail as shown in **Photo 4** to allow slack in the line.

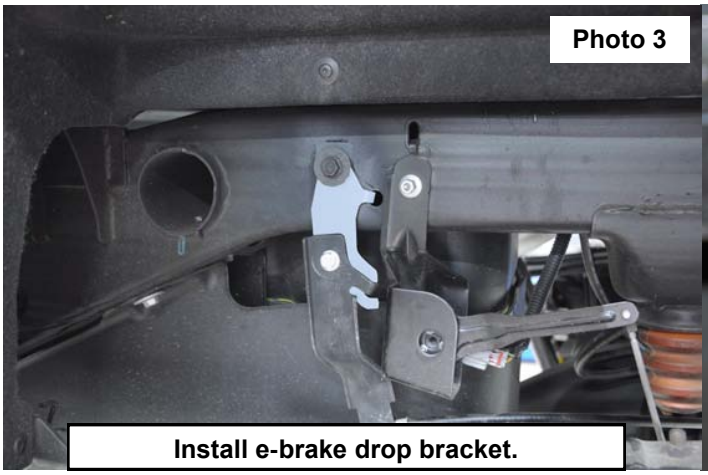

Install e-brake drop bracket.

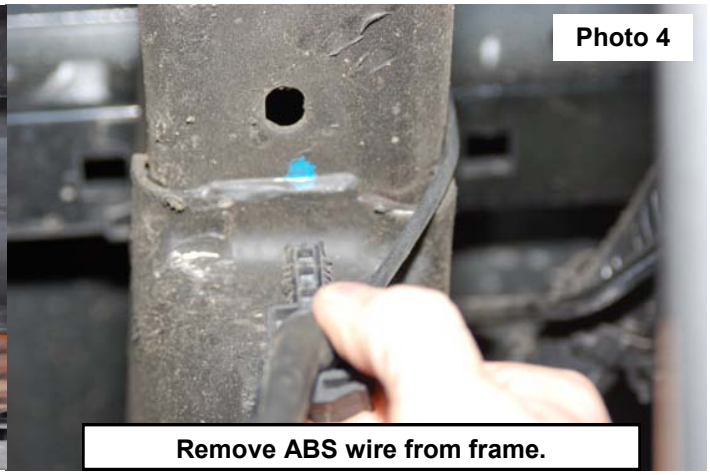

Remove ABS wire from frame.

6. Jack up the rear of the vehicle and place jack stands under the frame rails. Remove tire and wheels.
7. Lightly support the differential with a floor jack .
8. Remove the stock shock absorbers using a 21mm wrench. Retain the hardware for reuse.
9. Remove the stock u-bolts and lower the axle to allow the supplied block to be installed. Discard the factory block if so equipped.
10. Remove the MagneRide shim and flatten tab. Reinstall on bottom of leaf pack. **See Photo 5.**

Photo 5

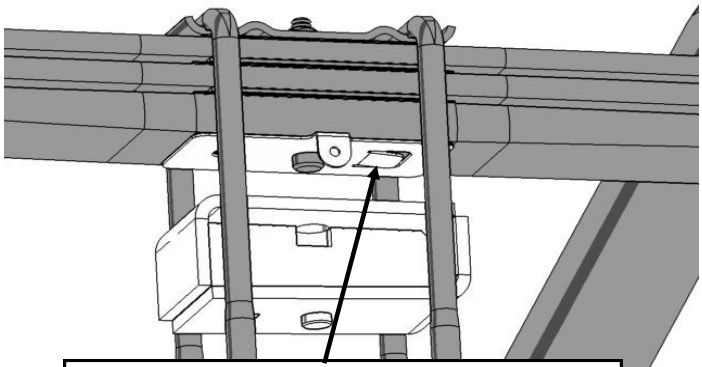
Flatten tab on MagneRide shim.

11. Install the new block. Jack up the axle to meet the new block and make sure the center pin is in the axle. **See Photo 6. Note short side of block goes towards front of vehicle.**
12. Install the supplied u-bolts and tighten using a 22mm wrench and a crossing pattern. **See Photo 6.**
13. 6” and 7.5” kits will also use the anti-wrap ubolts and hardware included in 1263BAG2.
14. Install the Magneride shock relocation brackets in the factory shock mounts using the supplied 14mm x 85mm bolt, nut and washers. **See Photo 7.**
15. Attach the rear of the relocation bracket using the supplied square washer and 1/2” x 1.5” bolt and washer. **See Photo 8.**
16. Install Magneride shock in relocation bracket using stock hardware.
17. Using WD-40 lubricate the ABS wire and slide the rubber sleeve up to allow the wire to be reinstalled in the clip on the frame. The connector will not be reattached to the top of the frame. Reroute the lines as needed to gain sufficient slack.
18. Re-install tires and wheels.
19. Remove jack stands and lower vehicle to ground.
20. Place window decal on vehicle.

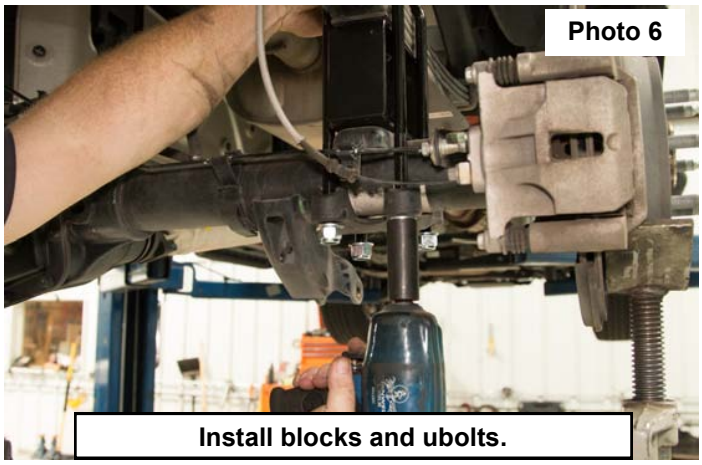

Install blocks and ubolts.

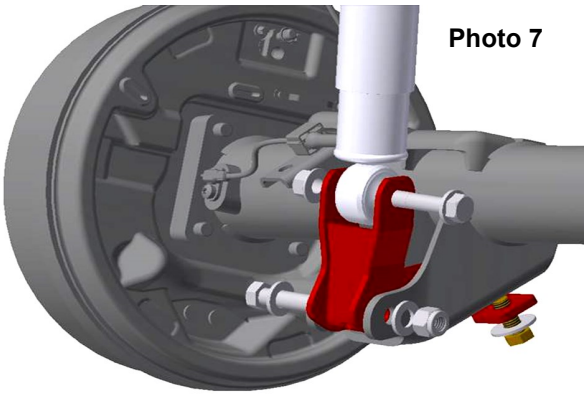

Install Magneride shock relocation brackets.

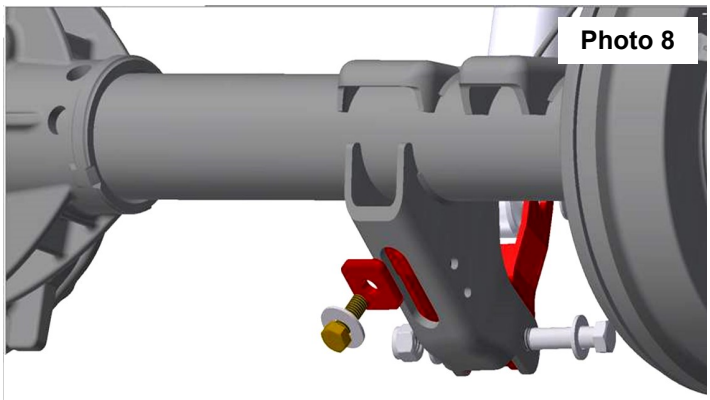

Install Magneride shock relocation brackets.

POST INSTALLATION INSTRUCTIONS

1. Check all fasteners for proper torque. Check to ensure for adequate clearance between all rotating, mobile, fixed, and heated members. Verify clearance between exhaust and brake lines, fuel lines, fuel tank, floor boards and wiring harness. Check steering gear for clearance. Test and inspect brake system.
2. Perform steering sweep to ensure front brake hoses have adequate slack and do not contact any rotating, mobile or heated members. Inspect rear brake hoses at full extension for adequate slack. Failure to perform hose check/ replacement may result in component failure.
3. On some vehicles the front lower skirting will need to be trimmed if using certain wheel /tire combinations and with heavy offset wheels. Trim only as needed.
4. Activate four wheel drive system and check front hubs for engagement.
5. Have a qualified alignment center align the vehicle immediately. Realign to factory specifications. The following are the recommended specifications:

Caster in degrees	4.5 +-1.0
Camber in degrees	0.0—.3
Toe In in degrees	0.1 +-.2

6. Perform head light check and adjustment to proper settings.
7. Check and retighten wheels at 50 miles and again at 500 miles.
8. All kit components must be retightened at 500 miles and then every three thousand miles after installation. Periodically check all hardware for tightness.
9. Install “Warning to Driver” decal on sun visor

Note: Installation of larger tires will require speedometer recalibration.

Instructions for Trimming Tie Rod Ends

1. Disassemble the tie rod from the tie rod ends
2. Measure over 3/8” and mark.
3. Cut the tie rods / tie rod sleeves as shown below to allow the vehicle to be realigned.
4. Smooth any rough edges.
5. Reassemble the cut assembly

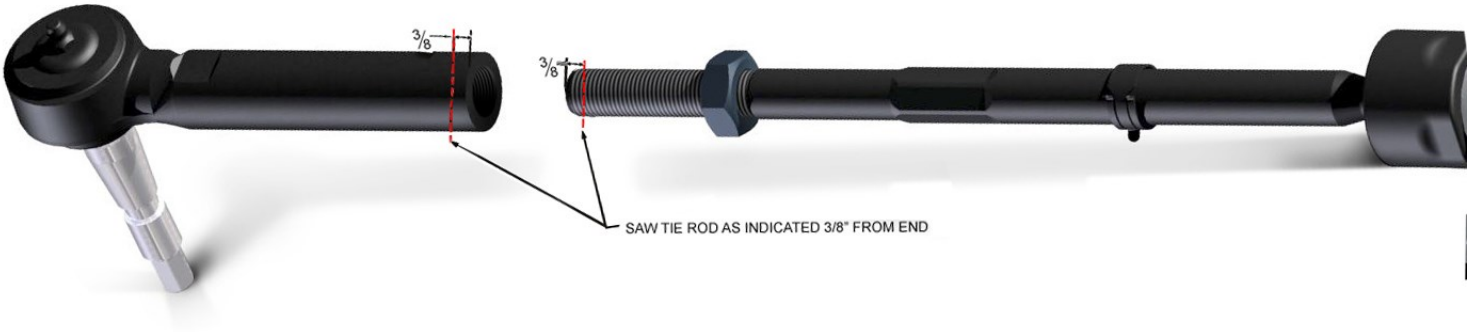

Thank you for choosing Rough Country for all of your suspension needs.

By purchasing any item sold by Rough Country, LLC, the buyer expressly warrants that he/she is in compliance with all applicable , State, and Local laws and regulations regarding the purchase, ownership, and use of the item. It shall be the buyers responsibility to comply with all Federal, State and Local laws governing the sales of any items listed, illustrated or sold. The buyer expressly agrees to indemnify and hold harmless Rough Country, LLC for all claims resulting directly or indirectly from the purchase, ownership, or use of the items.