Rough Country 14010 Installation Instructions

OV2 Steel Running Boards for Crew Cab Trucks

Part number: 14010

trailfortress.com/rough-country-ov2-running-boards-14010

Scan for fitment, price and install help

921401000

07-18 GM 1500 / 07-19 2500/3500 Crew Cab Overland Steps

Thank you for choosing Rough Country for all your vehicle needs.

Please read instructions before beginning installation. Check the kit hardware against the kit contents shown below. Be sure you have all needed parts and know where they go.
If question exist, please call us @1-800-222-7023. We will be happy to answer any questions concerning this product.
Check all fasteners for proper torque. Check to ensure for adequate clearance between all components.
Periodically check all hardware for tightness.

KIT CONTENTS:
Driver Side Step x1
Pass Side Step x1
Driver Fr Bracket x1
Driver Side Bracket x3
Pass Fr Bracket x1
Pass Fr Support Bracket x1
Pass Side Bracket x3

TOOLS NEEDED:
13mm Wrench / Socket

HARDWARE INCLUDED:
Bolt Plate x8
8mm Flat Washer x33
8mm Lock Washer x25
8mm x 25mm Hex Bolt x17
8mm x 30mm Hex Bolt x8
8mm Lock Nut x9
8mm Clip Nut x15



Torque Specs:

Size	Grade 5	Grade 8	Size	Class 8.8	Class 10.9
5/16”	15 ft/lbs	20ft/lbs	6MM	5ft/lbs	9ft/lbs
3/8”	30 ft/lbs	35ft/lbs	8MM	18ft/lbs	23ft/lbs
7/16”	45 ft/lbs	60ft/lbs	10MM	32ft/lbs	45ft/lbs
1/2”	65 ft/lbs	90ft/lbs	12MM	55ft/lbs	75ft/lbs
9/16”	95 ft/lbs	130ft/lbs	14MM	85ft/lbs	120ft/lbs
5/8”	135ft/lbs	175ft/lbs	16MM	130ft/lbs	165ft/lbs
3/4”	185ft/lbs	280ft/lbs	18MM	170ft/lbs	240ft/lbs

Bracket Placement Diagram (Pass Side Shown)

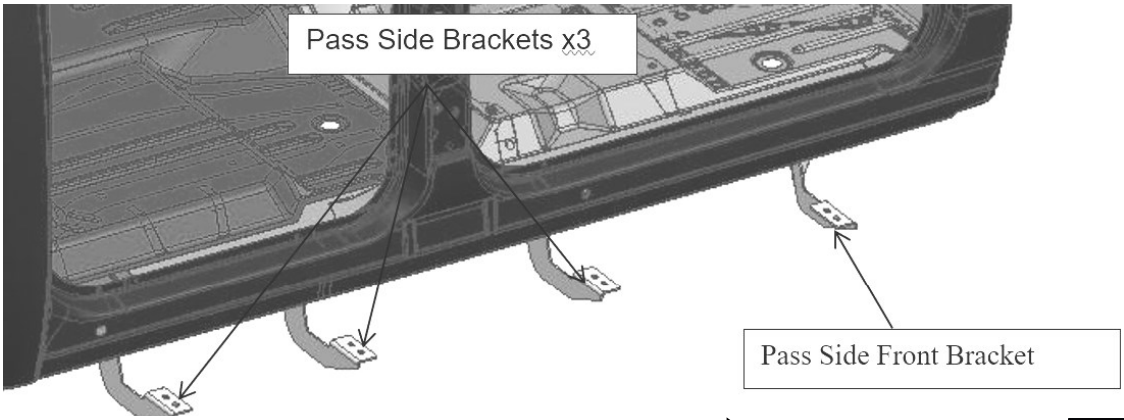

Passenger Front ⇨

INSTALLATION INSTRUCTIONS

1. Remove stock steps if installed. Stock hardware will not be reused.
2. Refer to the illustration on first page for correct bracket location on the **passenger** side. After confirming proper bracket location, install the supplied clips in the lower body lip. **See Photo 1.**
3. Install the front passenger side support bracket a shown with the supplied 8mm hardware. **See Photo 2.**

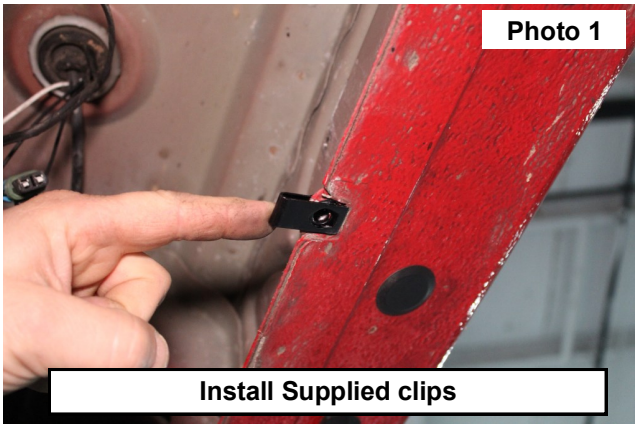

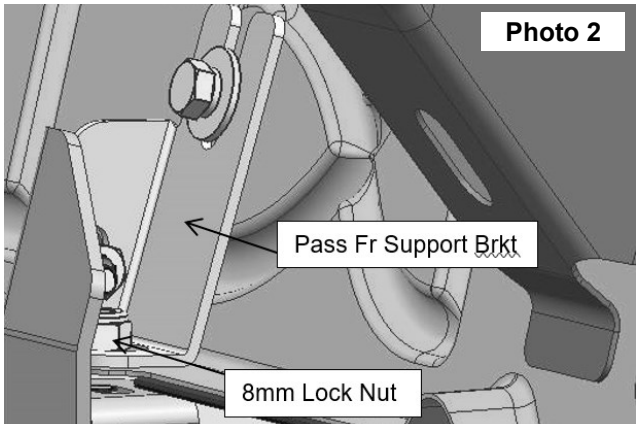

4. Install the mounting bracket to the support bracket and secure using the supplied 8mm hardware. **See Photo 3.**
5. Install the remaining three passenger side brackets and secure with supplied 8mm clip nuts and hardware.
6. Install the Driver Side Fr bracket using the supplied 8mm clip nuts and hardware. **See Photo 4.**

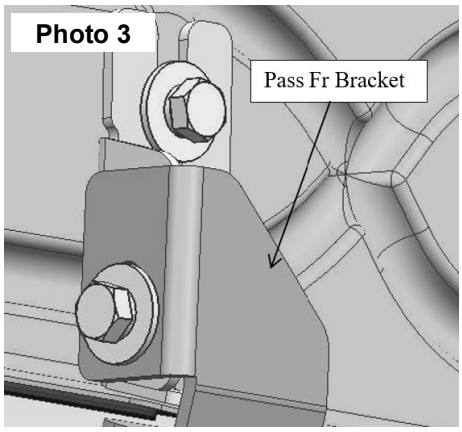

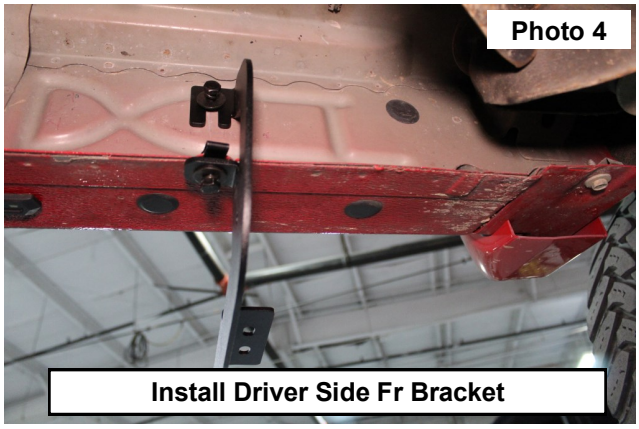

7. Install the three remaining driver side brackets using the supplied 8mm clip nuts and hardware.
8. Identify the driver and passenger side steps using the step brackets and line up the mounting plates on the steps. Place the nut plate in the mounting plates on the steps and secure using the supplied 8mm bolts, lock washers, lock nuts and (4) flat washers for each bolt plate. Tighten all hardware with a 13mm wrench. **See Photo 5 & 6**.
9. Periodically check and tighten hardware.

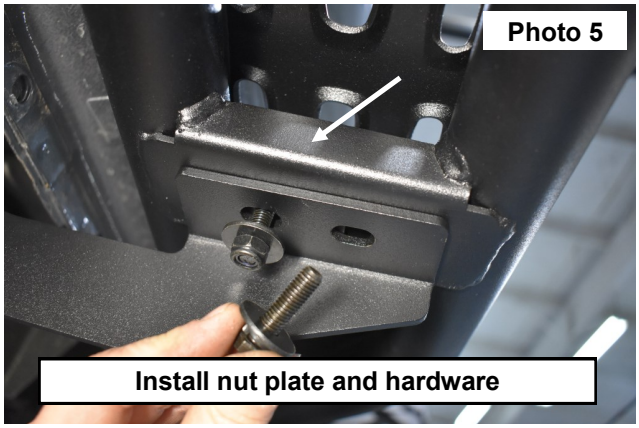

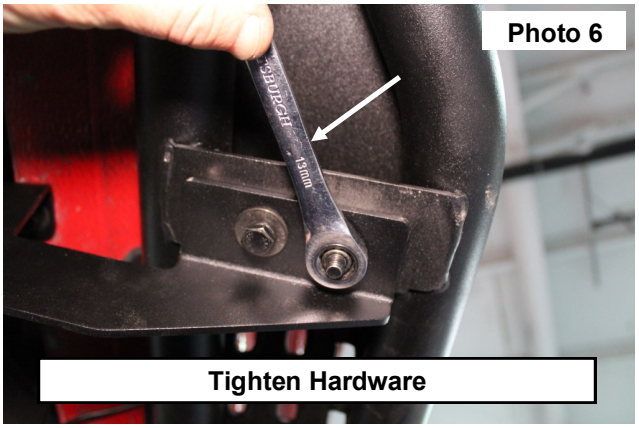

By purchasing any item sold by Rough Country, LLC, the buyer expressly warrants that he/she is in compliance with all applicable, State, and Local laws and regulations regarding the purchase, ownership, and use of the item. It shall be the buyers responsibility to comply with all Federal, State and Local laws governing the sales of any items listed, illustrated or sold. The buyer expressly agrees to indemnify and hold harmless Rough Country, LLC for all claims resulting directly or indirectly from the purchase, ownership, or use of the items.