TRAIL FORTRESS

BUILT FOR THE TRAIL. CHECKED FOR YOUR TRUCK.

Rough Country 1272BOX4 Installation Instructions

Kicker Bar Kit (Rough Country 1272BOX4)

Part number: 1272BOX4

trailfortress.com/kicker-bar-kit-rough-country-1272box4

Scan for fitment, price and install help

921272BOX4

ROUGH COUNTRY SUSPENSION SYSTEMS®

1272BAG5

99-06 CHEVY/GM KICKER BARS FOR 6”KIT

Thank you for choosing Rough Country for all of your suspension needs.

Rough Country recommends a certified technician installs this system. In addition to these instructions, professional knowledge of disassemble/reassembly procedures as well as post installation checks must be known. Attempts to install this system without this knowledge and expertise may jeopardize the integrity and/or operating safety of the vehicle.

Please read all the instructions before beginning the installation. Check the kit hardware against the parts list. Be sure you have all the needed parts and understand where they go. If anything is missing, do not proceed with the installation, call Rough Country to obtain needed items.

Product Use Information

⚠NOTICE 1999 and early 2000 models have a S shaped transmission cross-member. This kit will fit both the 1999-early 2000 and the late 2000 to 2006 models with the included components. Instructions are included in this sheet for both models.

⚠NOTICE

Notice to Dealer and Vehicle Owner

Any vehicle equipped with any Rough country product must have the “Warning to Driver” decal installed on the sun visor or dash. The decal is to act as a constant reminder for whoever is operating the vehicle of its unique handling characteristics. INSTALLING DEALER—It is your responsibility to install the warning decal and to forward these installation instructions on too the vehicle owner for review and to be kept in the vehicle for its service life.

Kit Contents:

- **Kicker Bars (2)**
- **Rear Cross member Brackets (2)**
- **Kicker Bracket (2)**
- **Poly Bag (1)**

Tools Needed:

3/4” Socket / Wrench
Magnet Tool
18mm Socket / Wrench

Torque Specs

Size	Grade 5	Grade 8
1/2”	65 ft/lbs	90 ft/lbs
	Class 8.8	**Class 10.9**
12MM	55ft/lbs	75ft/lbs

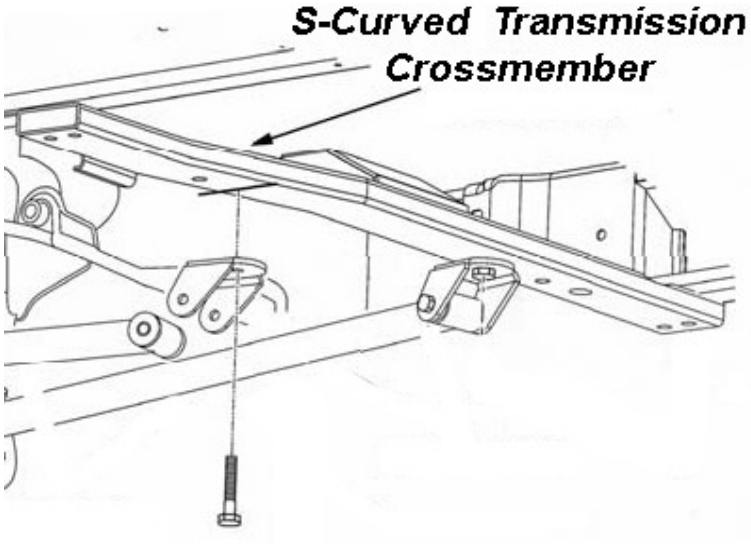

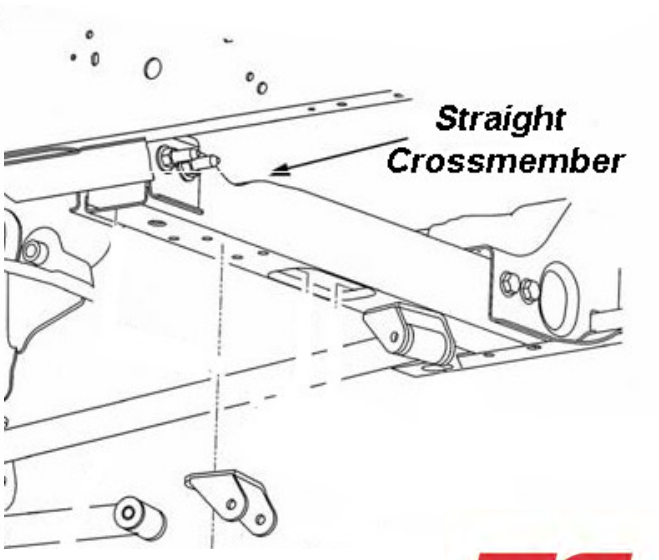

INSTALLATION INSTRUCTIONS FOR 1999 TO EARLY 2000 MODELS EQUIPPED WITH A CURVED CROSSMEMBER

1. On the driver side, remove the stock cross member bolt as shown using a 18MM wrench. **See Photo 5.**
2. Install the supplied kicker brace bracket using the rear hole in the bracket as shown in **Photo 6** using the 12mm x 65mm bolt/washers & nut. Do not tighten at this time. **Note the position of the bracket and the hole that is being used to mount the bracket to the stock cross member.**
3. Swing up the kicker bar that was installed on the rear cross member and install in the kicker bracket with the


Photo 5

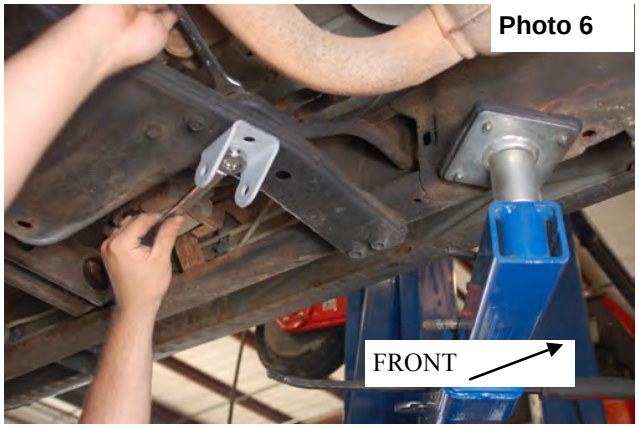

Photo 6

supplied 1/2” x 3 1/2 bolts/washers & nuts.

4. Remove the stock bolt from the cross member as shown in **Photo 7** using a 18mm wrench/socket.
5. Remove the Install the kicker bracket on the passenger side as shown in **Photo 8** using the supplied 12mm 65mm bolts/washers & nuts. **Note the position of the bracket and the hole that is being used to mount the bracket to the stock cross member.**


Photo 7



Photo 8

6. Swing the kicker bar that was installed earlier up to the kicker bracket and secure with the supplied 1/2” x 3 1/2” bolts/washers & nuts. **See Photo 9**. Tighten both driver and passenger side kicker bolts using a 3/4” socket/wrench.

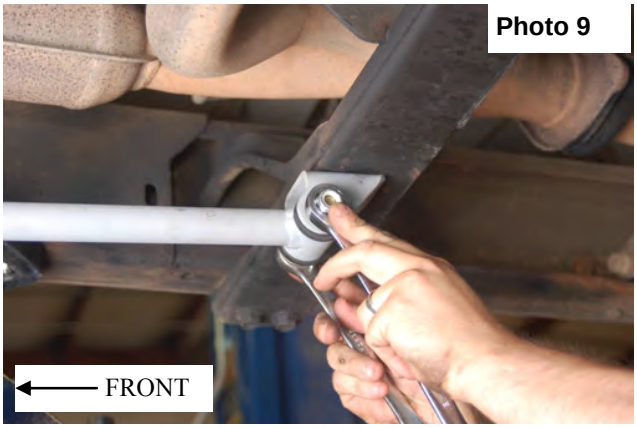

Photo 9

INSTALLATION INSTRUCTIONS FOR LATE 2000 TO 2006 MODEL VEHICLE EQUIPPED WITH STRAIGHT CROSSMEMBER

1. Locate the kicker bars and install the supplied bushings and sleeves in the arms. Install on the rear cross-member as shown in **Photo 1** with the supplied 1/2" x 3 1/2" bolts, washers & nuts.
2. Place the supplied 1/2" x 1" bolt in the stock cross-member as shown in **Photo 2** using a magnet tool.

Photo 1



Photo 2

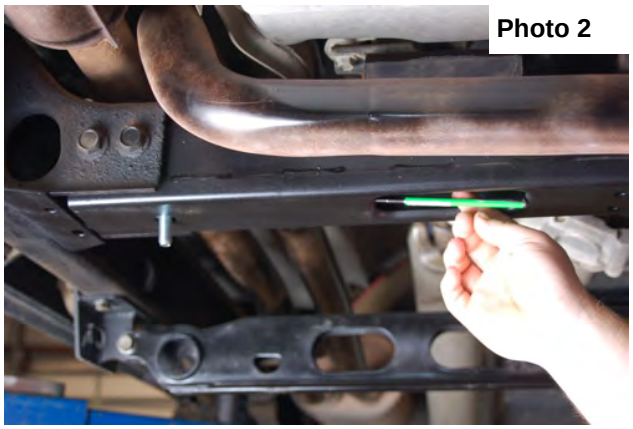

3. Install the kicker bracket as shown in **Photo 3.** Do not fully tighten the kicker bracket at this time.
4. Swing up the kicker bar installed in **Step 2** and secure with the supplied 1/2" x 3 1/2" bolts/washers & nuts. Tighten the kicker bracket and the kicker bar at this time using a 3/4" socket/wrench. **See Photo 4.**

Photo 3



Photo 4



KIT COMPONENTS



99-EARLY 2000
CROSS MEMBER HARDWARE

POST INSTALLATION INSTRUCTIONS

1. On some vehicles the front lower skirting will need to be trimmed if using certain wheel /tire combinations and with heavy offset wheels. Trim only as needed.
2. Have a qualified alignment center align the vehicle immediately.
3. Have headlights adjusted to proper settings.
4. Wheels must be retighten at 50 miles.
5. Recheck lifted height and adjust torsion bar as necessary.
6. All kit components must be retightened at 500 miles and then every three thousand miles after installation. Periodically check hardware for tightness.
7. Install “Warning to Driver” decal on sun visor.

Thank you for choosing Rough Country for all of your suspension needs.

trailfortress.com/kicker-bar-kit-rough-country-1272box4