Rough Country 117510 Installation Instructions

Single Hoop Step, Forged Aluminum, Sold in Pairs

Part number: 117510

trailfortress.com/single-hoop-step-forged-aluminum-sold-in-pairs-rough-country-117510

Scan for fitment, price and install help

921117510

ROUGH COUNTRY SUSPENSION SYSTEMS®

Universal Hoop Step

Thank you for choosing Rough Country

Please read instructions before beginning installation. Check the kit hardware against the parts list and product layout. Be sure you have all needed parts and know where they go. Also please review tools needed list and make sure you have needed tools. If question exist we will be happy to answer any questions concerning the design, function, and correct use of this product.

Kit Contents:

8– 5/16” x 1 1/8” Bolt
4– 5/16” x 2” Bolt
8– 5/16” x 18 Nut
16– 5/16” Washer
8– Sheet Metal Screw
4– U-Shaped Spacer
4– Plastic Wedge Spacer
4– C-Shaped Bracket
4– Sleeves
16– 6mm Flat Washers
8– 6mm x 20mm Bolts
8– 6mm Nylock Nuts

Tools Needed:

Phillips screwdriver x2 (long and short)
Power drill
Drill bits: 1/8”, 1/4”, 3/8”
Center punch
1/2” Open end wrench
Ratchet with 1/2” socket
Marker pen

INSTALLATION INSTRUCTIONS

1. Install the supplied tread plate using the supplied 6mm black stainless hardware with the washer on the bottom of the step.
2. Place vehicle on a flat surface and set emergency brake. Remove the factory steps if equipped. Retain stock hardware.
3. Verify your vehicles rocker panel style. **See Photos 1 - 5**.

PHOTO 1

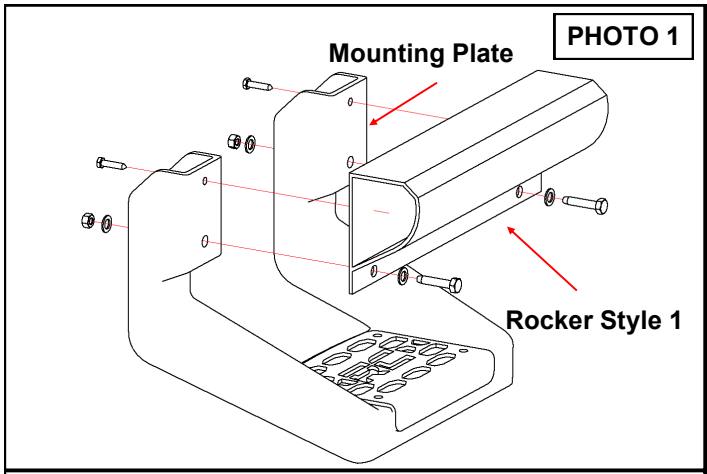

PHOTO 2

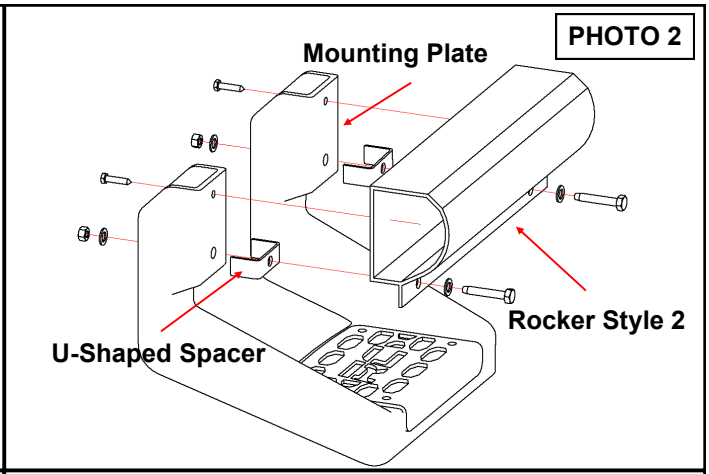

PHOTO 3

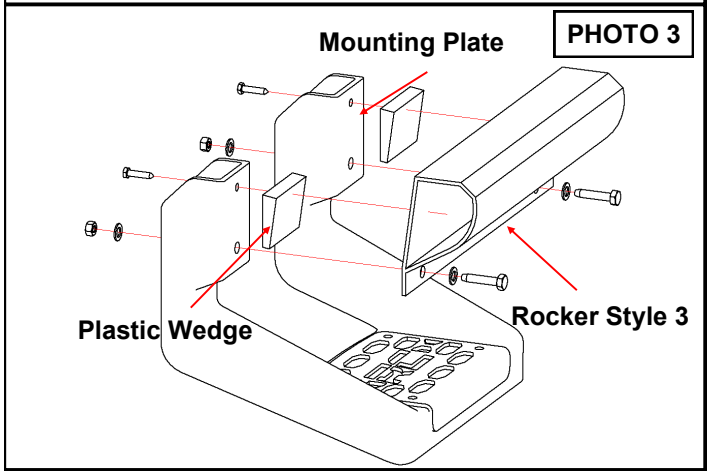

PHOTO 4

