Rough Country 117510 Installation Instructions

Single Hoop Step, Forged Aluminum, Sold in Pairs

Part number: 117510

trailfortress.com/single-hoop-step-forged-aluminum-sold-in-pairs-rough-country-117510

Scan for fitment, price and install help

921117510

ROUGH COUNTRY SUSPENSION SYSTEMS®

Universal Hoop Step

Thank you for choosing Rough Country

Please read instructions before beginning installation. Check the kit hardware against the parts list and product layout. Be sure you have all needed parts and know where they go. Also please review tools needed list and make sure you have needed tools. If question exist we will be happy to answer any questions concerning the design, function, and correct use of this product.

Kit Contents:

8– 5/16” x 1 1/8” Bolt
4– 5/16” x 2” Bolt
8– 5/16” x 18 Nut
16– 5/16” Washer
8– Sheet Metal Screw
4– U-Shaped Spacer
4– Plastic Wedge Spacer
4– C-Shaped Bracket
4– Sleeves
16– 6mm Flat Washers
8– 6mm x 20mm Bolts
8– 6mm Nylock Nuts

Tools Needed:

Phillips screwdriver x2 (long and short)
Power drill
Drill bits: 1/8”, 1/4”, 3/8”
Center punch
1/2” Open end wrench
Ratchet with 1/2” socket
Marker pen

INSTALLATION INSTRUCTIONS

1. Install the supplied tread plate using the supplied 6mm black stainless hardware with the washer on the bottom of the step.
2. Place vehicle on a flat surface and set emergency brake. Remove the factory steps if equipped. Retain stock hardware.
3. Verify your vehicles rocker panel style. **See Photos 1 - 5**.

PHOTO 1

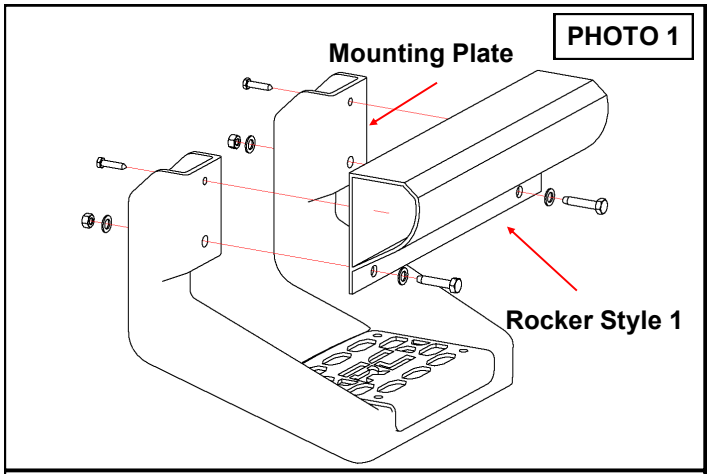

PHOTO 2

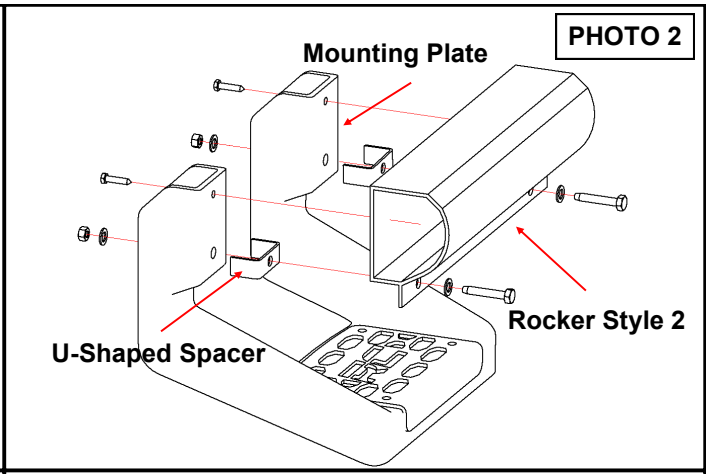

PHOTO 3

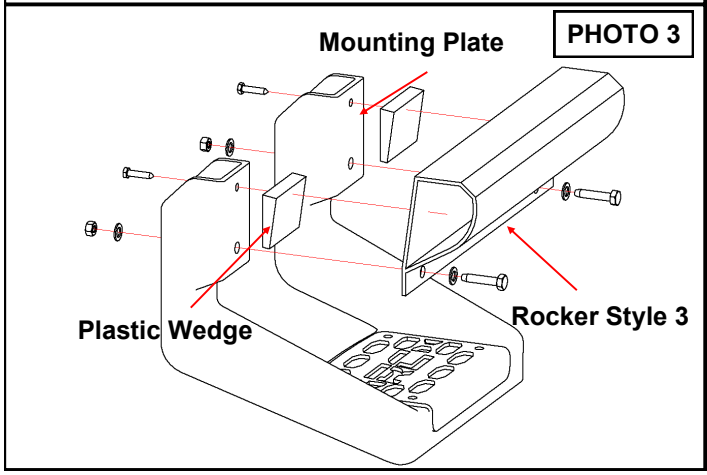

PHOTO 4

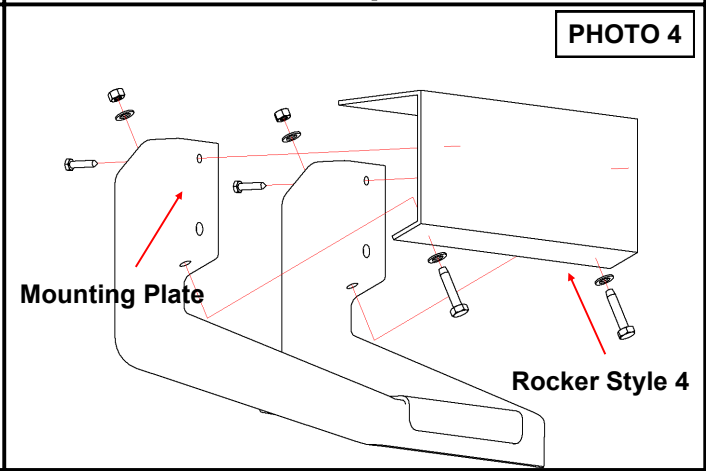

Instructions for Styles 1, 2, and 3

5. Align the step. The center of the step should line up with the front of the seat. Make sure the mounting legs on the step lay flat on the vehicles rocker panel..
6. Mark a line along the center of the step onto the pinch weld flange of the rocker panel. Some models need the flange bent into a vertical position. Measure 4 1/16” on each side of the center line and mark these points on the pinch weld flange. Total distance between the lines should be 8 1/8”.
7. Use a center punch and drill a 1/8” pilot hole on each point. Drill a 3/8” hole at each pilot hole.

⚠ NOTICE **Verify the area where you are drilling is clear of obstructions.**

8. Put the step in mounting position and line up the bottom of the mounting plates with the bottom of the pinch weld. Mark a point through each 3/8” hole you just drilled.
9. Remove step and drill a 3/8” hole on the points.
10. For Style 1: (**See Photo 1)**
    a. Attach the step to the rocker using 5/16” x 1 1/8” bolts, nuts, and washers. Hand tighten only.
    b. Drill a 1/8” hole through top 1/4” hole into the rocker. Screw in a 1” sheet metal screw. Now fully tighten bolts.
11. For Style 2: (**See Photo 2**)
    a. Attach the step to the rocker using 5/16” x 2” bolts, nuts, and washers along with the U-shaped spacers. Hand tighten only.
    b. Drill a 1/8” hole through top 1/4” hole into the rocker. Screw in a 1” sheet metal screw. Now fully tighten bolts.
12. For Style 3: (See Photo 3)
    a. Attach the step to the rocker using 5/16” x 1 1/8” bolts, nuts, and washers and leave loosely hanging.
    b. Place the plastic wedges between the rocker and the mounting legs. Adjust the wedges until the step is level and mark a point on the wedge through the 1/4” hole on the top. Remove the wedge and drill a 1/4” on the point.
    c. With the wedge back in place, drill a 1/8” hole through the step and wedge into the rocker. Then screw a 1” sheet metal screw through the step, wedge, and rocker. Now fully tighten bolts.

Instructions for Style 4 (See Photo 4)

13. Align the step. The center of the step should line up with the front of the seat. Make sure the mounting legs on the step lay flat on the vehicles rocker panel.
14. Mark a line along the center of the step onto the pinch weld flange of the rocker panel. Measure 4 1/16” on each side of the center line and mark these points on the pinch weld flange. Total distance between the lines should be 8 1/8”.
15. Use a center punch and drill a 1/8” pilot hole on each point. Drill a 3/8” hole at each pilot hole.

⚠ NOTICE **Verify the area where you are drilling is clear of obstructions.**

16. Put the step in the mounting position and align the mounting holes on the underside of the mounting plate with the 3/8” holes you just drilled. Attach the step with the 5/16” x 1 1/8” bolts, nuts, and washers. Hand tighten only
17. Drill a 1/8” hole through top 1/4” hole into the rocker. Screw in a 1” sheet metal screw. Now fully tighten bolts.

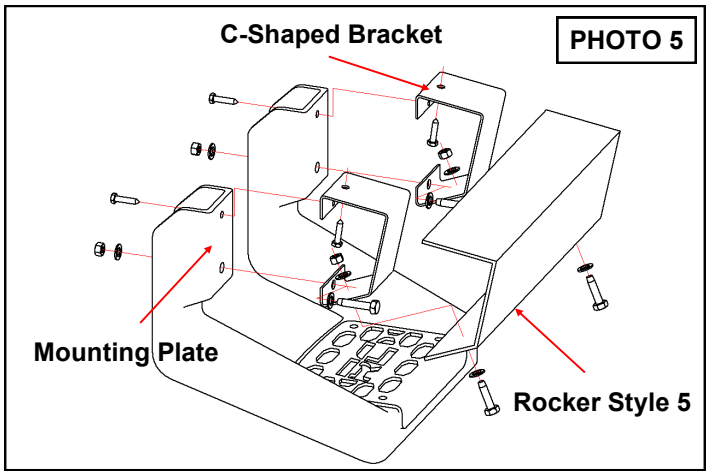

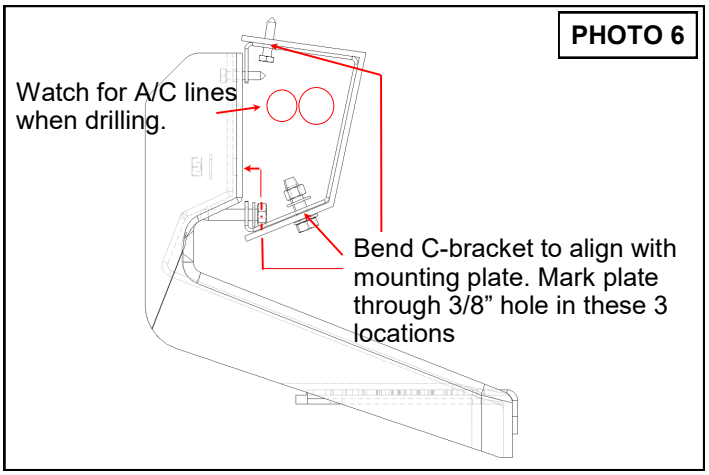

Instructions for Style 5 (See Photos 5-6)

10. Align the step. The center of the step should line up with the front of the seat.
11. Mark a line along the center of the step onto the pinch weld flange of the rocker panel. Measure 4 1/16” on each side of the center line and mark these points on the pinch weld flange. Total distance between the lines should be 8 1/8”.
12. From those outside lines, measure 1/2” (1/4” for Suburban models) inward towards the truck from the inside edge of the pinch weld and mark a point on each of the two lines. Use a center punch and drill a 1/8” pilot hole on each point. Drill a 3/8” hole at each pilot hole.

⚠NOTICE **Verify the area where you are drilling is clear of obstructions such as air conditioning lines and wire harnesses.**

13. Put each C-shaped bracket up inside the rocker panel above the holes you just drilled. Use the step to get an accurate spacing for the C-shaped brackets by aligning holes at the top of the mounting plate with the small holes on the C-shaped brackets.
14. **See Photo 6**. Bend C-bracket to align with mounting plate. Now make 3 markings on the plate, the bottom of the C-shaped brackets, and the top of the rocker through their respective holes. Remove brackets and drill 3/8” holes in the bottom of the brackets and in the step mounting plate.

⚠NOTICE

15. **Before drilling through the mark you made on the rocker, remove the plastic door entry cover on the inside of the vehicle, and move the wire harness out of the way. Then drill a 1/8” hole.**
16. Reinstall the C-Bracket and assemble the steps with the sheet metal screws and bolts as seen in **Photos 5 and 6**.
17. Reinstall the plastic door entry cover. Make sure the screws do not pierce any wires when reinserting the harness.

THANK YOU FOR CHOOSING ROUGH COUNTRY FOR YOUR OFF ROAD NEEDS.

By purchasing any item sold by Rough Country, LLC, the buyer expressly warrants that he/she is in compliance with all applicable , State, and Local laws and regulations regarding the purchase, ownership, and use of the item. It shall be the buyers responsibility to comply with all Federal, State and Local laws governing the sales of any items listed, illustrated or sold. The buyer expressly agrees to indemnify and hold harmless Rough Country, LLC for all claims resulting directly or indirectly from the purchase, ownership, or use of the items.

