TRAIL FORTRESS

BUILT FOR THE TRAIL. CHECKED FOR YOUR TRUCK.

Rough Country 11002 Installation Instructions

Hidden Winch Plate for 1999-2007 Chevy Silverado & GMC Sierra 1500

Part number: 11002

trailfortress.com/hidden-winch-plate-chevy-silverado-gmc-sierra-1500-rough-country-11002

Scan for fitment, price and install help

921110020

ROUGH COUNTRY SUSPENSION SYSTEMS®

11002BAG1

1999-06 GM 1500 Hidden Winch Plate

THANK YOU FOR CHOOSING ROUGH COUNTRY FOR YOUR OFF ROAD NEEDS.

Rough Country recommends a certified technician install this kit. In addition to these instructions, professional knowledge of disassemble/reassembly procedures as well as post installation checks must be known. Attempts to install this kit without this knowledge and expertise may jeopardize the integrity and/or operating safety of the vehicle.

Please read instructions before beginning installation. Check the kit hardware against the parts list. Be sure you have all needed parts and know where they go. Also please review tools needed list and make sure you have needed tools.

***Note* there are different steps for GMC and Chevrolet trucks in this instruction sheet.**

PRODUCT USE INFORMATION

Install winch with instructions supplied with winch. Always practice safe winching and recovery. Never overload a winch or use the winch which in any way would void your manufactures warranty.

Tools Needed:

16mm wrench /socket
18mm wrench /socket
19mm wrench
5/8” Wrench
Drill Motor
15/32” Drill
Torque Wrench
10mm Socket
13mm Socket
9/64” Allen
9mm Wrench
Reciprocating Saw
Or
Body Saw

Kit Contents:

11002 Box Contains:
- Winch Plate
- 11002BAG
- Remote Wiring Extension
- Remote Plug Bracket

11002 Bag:
- 4- 7/16” Flag Nuts
- 4- 7/16” Flat Washers
- 4- 7/16” Lock Washers
- 4- 7/16” x 1.5” Bolts
- 1- 8mm x 25mm Bolt
- 1- 8mm Flat Washer
- 1- 8mm Lock Washer
- 2- #8 x 1” SHCS Bolts
- 2- #8 Nylock Nuts



1999-03 GMC Bumper Cutting Instructions

1. Find the vertical centerline of the bumper and measure 6 7/8” to each side and mark using masking tape. **See Photo 1**.
2. Measure up 4 1/2” from the bottom of the bumper and mark. **See Photo 2**.
3. Using a reciprocating saw, cut along the marks.



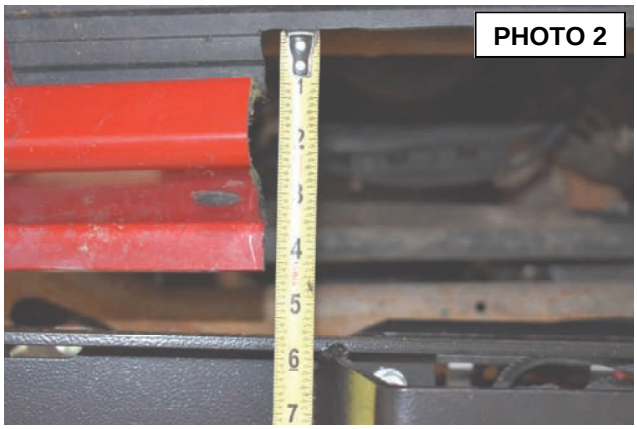

4. Test fit the winch plate to make sure no further trimming is needed.
5. File or lightly sand the cut edges.
6. Proceed to winch and winch plate installation.

2004-06 GMC Bumper Cutting Instructions

1. Measure over 4 1/4” from the vertical support in towards the center of the bumper and mark using masking tape. **See Photo 1**.
2. Repeat on the opposite side.
3. Measure up 3/4” from the bottom of the bumper and mark with tape. **See Photo 1**.
4. Using a reciprocating saw, cut along the inside edge of the tape. **See Photo 2.**
5. Test fit the winch plate to make sure no further trimming is needed. **See Photo 3.**

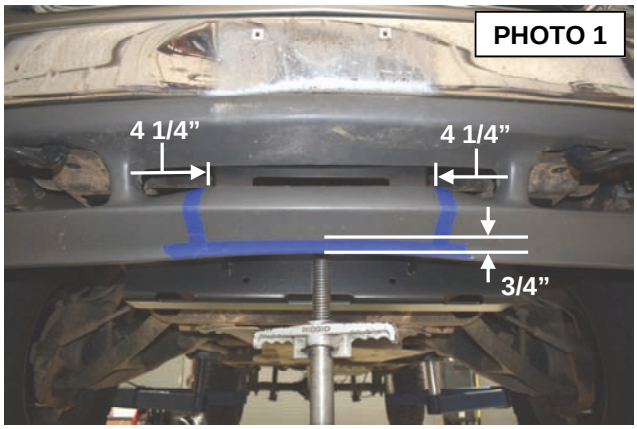



6. Remove the tape and file or lightly sand the cut edges.
7. Proceed to winch and winch plate installation.



1999-03 Chevrolet Bumper Cutting Instructions

1. In the center of the front bumper, measure down from the bottom, of the chrome, 5” and mark. **See Photo 1**.
2. Measure 5 1/2” in from each indention in the plastic and mark. **See Photo 1.**
3. Using a reciprocating saw or body saw and cut the plastic as shown in **Photo 1.**
4. Test fit the winch plate.
5. File or lightly sand cut edges.
6. Proceed to winch and winch plate installation.

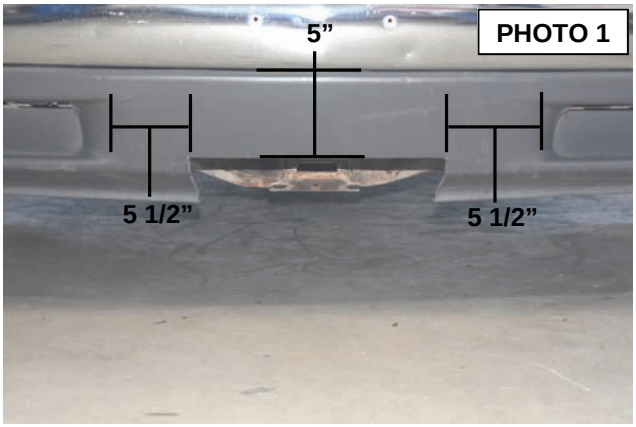

2004-06 Chevrolet Bumper Cutting Instructions

1. Measure up from the bottom of the bumper 5 1/2” and mark. **See Photo 1**.
2. Measure over, towards the center of the bumper, 2 1/2”. This will give you the centerline of the bumper. **See Photo 2**.





3. Using a 1/2” drill, drill through the plastic. This will give a starting hole for cutting. **See Photo 3**.
4. Align the supplied template on the bumper.
5. Using a reciprocating saw, cut along the desired (Hawse or Roller Fairlead) template line.



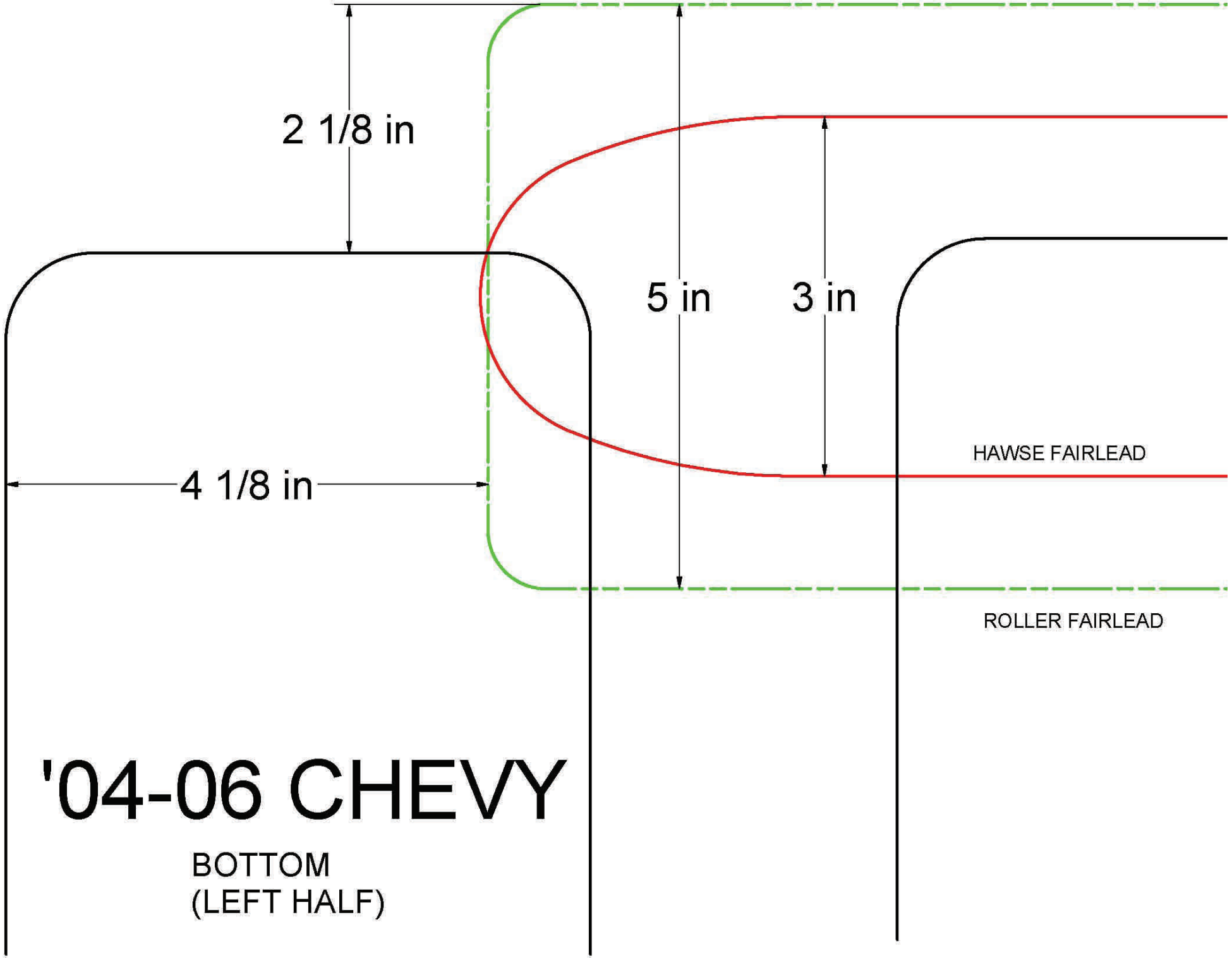

trailfortress.com/hidden-winch-plate-chevy-silverado-gmc-sierra-1500-rough-country-11002

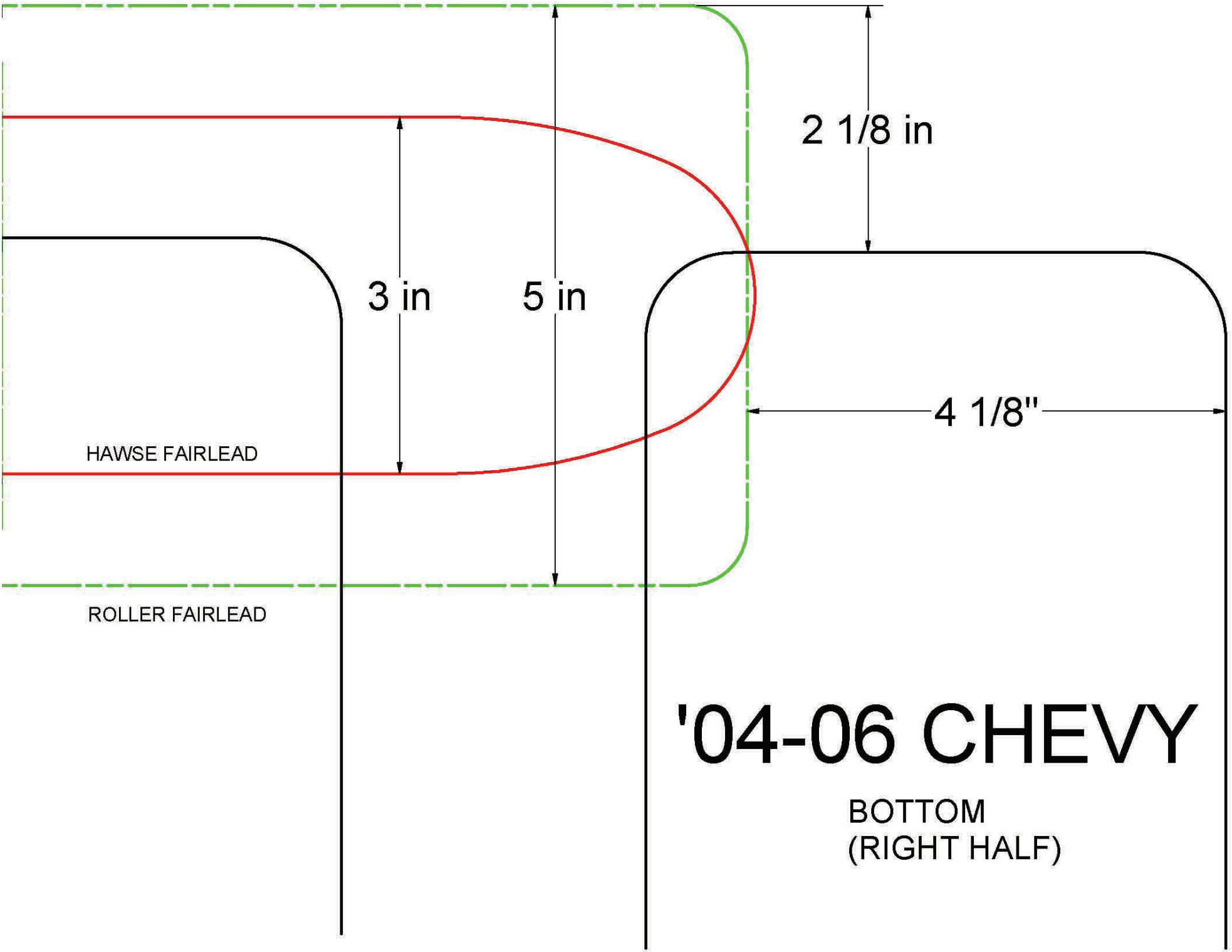

trailfortress.com/hidden-winch-plate-chevy-silverado-gmc-sierra-1500-rough-country-11002

Winch and Winch Mount Installation Instructions

1. Attach the winch to the winch plate using the hardware supplied with the winch. **Wires on the winch must be on the top. See Photo 1**.
2. Tighten the hardware using a 16mm socket. **See Photo 2**.
3. Using an 18mm socket, remove the bottom tow hook bolts from each side.

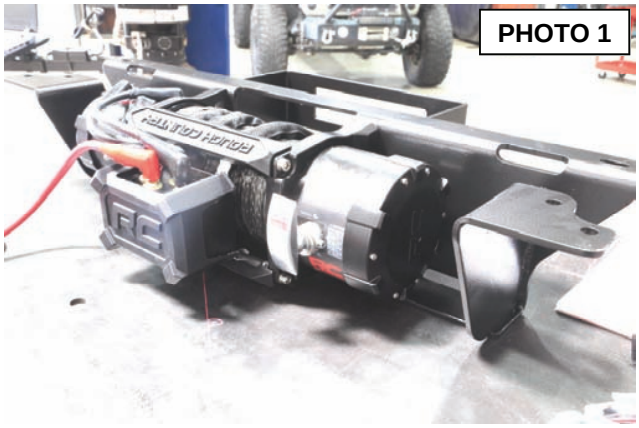



4. Lift the winch and winch plate, using a jack, to the bottom of the frame rails. **See Photo 3**.
5. Use the factory tow hook bolts to attach the winch plate to the front of the frame, while supporting the winch plate with a jack. Torque the factory bolts to factory specs using an 18mm socket. **See Photo 4**.





6. Using the winch plate as a guide, drill the remaining 4 holes using a 15/32” drill. **See Photo 5.**
7. Install the supplied (4) 7/16” flag nuts and 7/16” x 1.5” bolts, lock washers, and flat washers. **See Photo 6.**
8. Torque the 7/16” bolts to 60ft-lbs using a 5/8” socket.





9. Using a 10mm socket remove the factory bolt from the firewall brace on the driver side and retain for reuse. **See Photo 6.**
10. Install the supplied bracket behind the brace using the factory bolt and the supplied 8mm x 25mm bolt, lock washer and flat washer. **See Photo 7.**

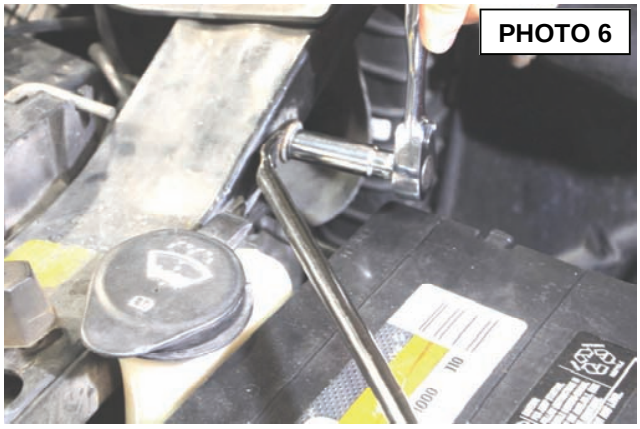

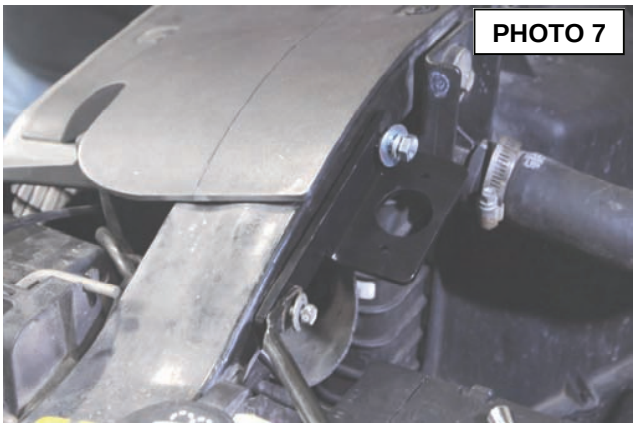

11. Tighten the factory bolt using a 10mm socket and the supplied bolt using a 13mm socket. **See Photo** 8
12. Install the supplied wiring extension through the bracket and plug into the winch. **See Photo 9.**



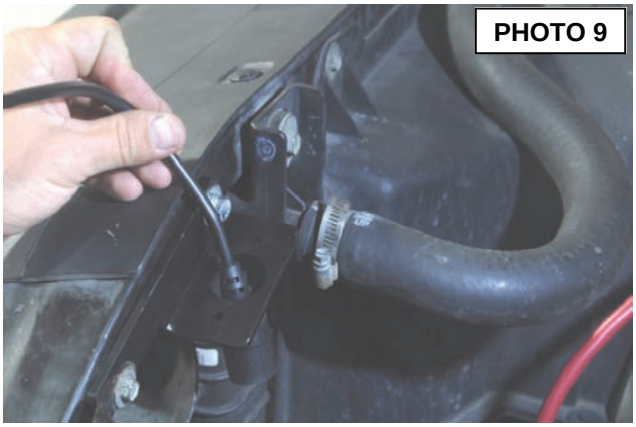

13. Secure the wiring extension to the bracket using the supplied #8 x 1" bolts, washers and nuts. Tighten using a 9/64 Allen and a 9mm wrench. **See Photo 10.**
14. Complete the winch install according to the instructions provided with the winch.



THANK YOU FOR CHOOSING ROUGH COUNTRY FOR YOUR SUSPENSION NEEDS

By purchasing any item sold by Rough Country, LLC, the buyer expressly warrants that he/she is in compliance with all applicable , State, and Local laws and regulations regarding the purchase, ownership, and use of the item. It shall be the buyers responsibility to comply with all Federal, State and Local laws governing the sales of any items listed, illustrated or sold. The buyer expressly agrees to indemnify and hold harmless Rough Country, LLC for all claims resulting directly or indirectly from the purchase, ownership, or use of the items.