TRAIL FORTRESS

BUILT FOR THE TRAIL. CHECKED FOR YOUR TRUCK.

Rough Country 10570 Installation Instructions

Front Winch Bumper for Jeep Cherokee XJ (1984-2001)

Part number: 10570

trailfortress.com/front-winch-bumper-jeep-cherokee-xj-rough-country-10570

Scan for fitment, price and install help

92105700A

ROUGH COUNTRY SUSPENSION SYSTEMS®

1057BAG4

JEEP XJ WINCH BUMPER

Thank you for choosing Rough Country for all your suspension needs.

Please read instructions before beginning installation. Check the kit hardware against the parts list. Be sure you have all needed parts and know where they go. Also please review tools needed list and make sure you have needed tools.

PRODUCT USE INFORMATION

⚠WARNING Please read instructions before beginning installation. Check the kit hardware against the parts list and product layout. Be sure you have all needed parts and know where they go. Also please review tools needed list and make sure you have needed tools.

⚠WARNING On 84-96 models XJ's the lower part of the fender flare that is below the factory bumper line will have to be cut off and removed.

If questions exist we will be happy to answer any questions concerning the function and correct use of this product.

The installer must verify that the mounting kit does not interfere with the factory air bag sensors, which must not be relocated or modified in any way. The vehicles air bag system may not operate properly if the winch mounting kit is not mounted in compliance with the vehicle manufacturers recommendations.

Optional Accessories are available for the Rough Country winch bumper including: See back page for info:

Part # 1055...Stinger



Kit Contents:

1057Box1
- Bumper

1057Box2
- Winch Plate
- Frame Brackets

1057BAG1-
- 22-1/2" x 1 1/2" Bolt
- 22-1/2" Lock nuts
- 44-1/2" Flat Washers
- 4-7/16" x 4" Bolts
- 4-7/16" x 1 1/4" Bolts
- 14-7/16" Flat Washers
- 6-7/16" Lock Nuts
- 2-10mm x 35mm
- 2-10mm Flat Washers
- 2-12mm x 35mm Bolts
- 2-12mm Flange Lock nuts

1057BAG3-Accessrory Hardware Bag
- 14-1/2" X 1 1/2" Allen Head Bolts
- 14-Lock Nuts

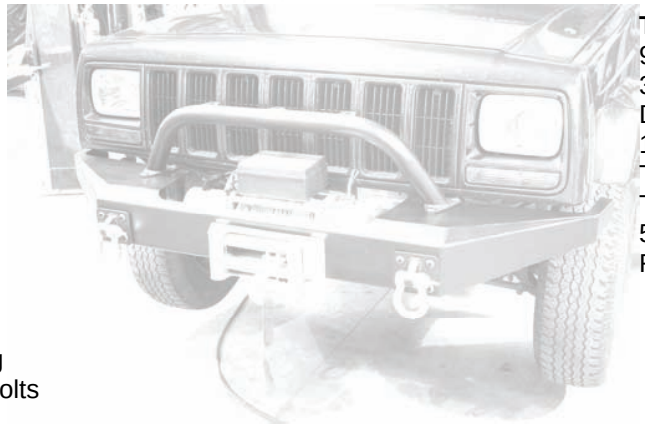

Tools Needed:
9/16" Socket/ Wrench
3/4" Socket / Wrench
Drill Motor
15/32" Drill Bit
T30 Torx Head Bit
T55 Torx head
5/16" Allen Head Wrench
Rachet

trailfortress.com/front-winch-bumper-jeep-cherokee-xj-rough-country-10570

INSTALLATION INSTRUCTIONS

1. Place vehicle on a flat surface and set emergency brake.
2. Remove the front bumper end caps as shown in **Photo 1 & Photo 2** using a 10mm wrench and remove the cap from the bumper.

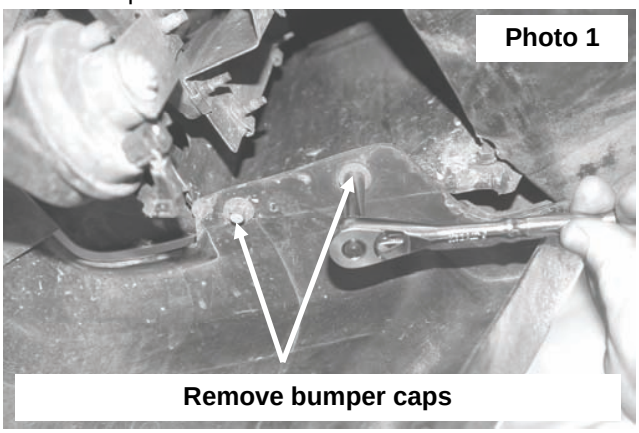

Remove bumper caps

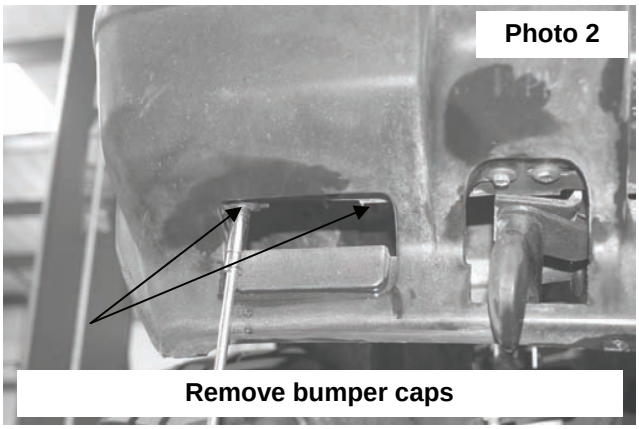

Remove bumper caps

3. Remove the bumper as shown in **Photo 3** by removing the bolts using a T30 torx head bit wrench.
4. Remove the bumper bolts (three per side) as shown in **Photo 4** from the uni-body using a 15mm socket.

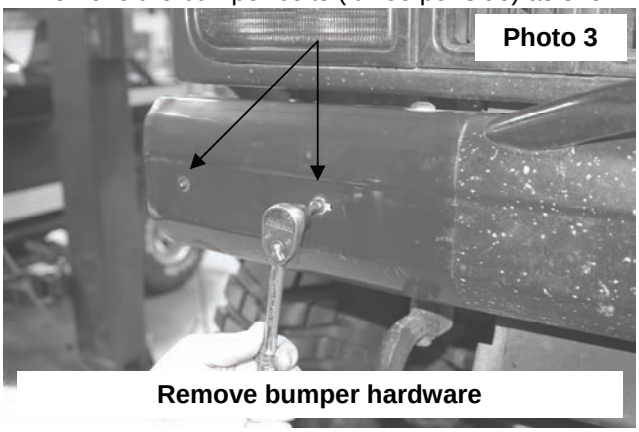

Remove bumper hardware

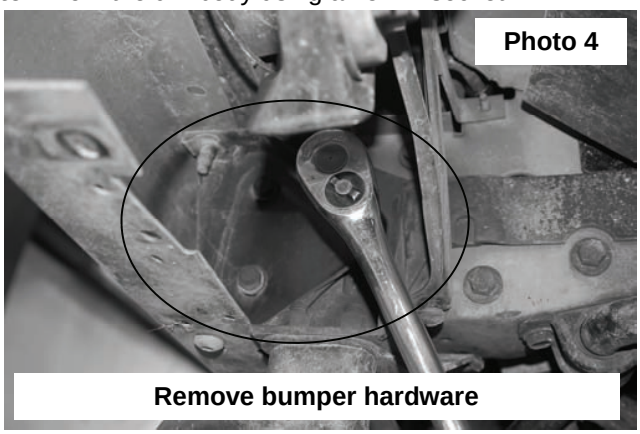

Remove bumper hardware

5. Remove the rear most bumper bolt from the uni-body using a T55 torx bit. **See Photo 5.**
6. Remove the bumper from the vehicle.
7. Install the bumper bracket on the frame as shown with the 7/16” x 4” bolts, washers and lock nuts on the driver side. **See Photo 6.** Do not tighten until all bolts have been installed.

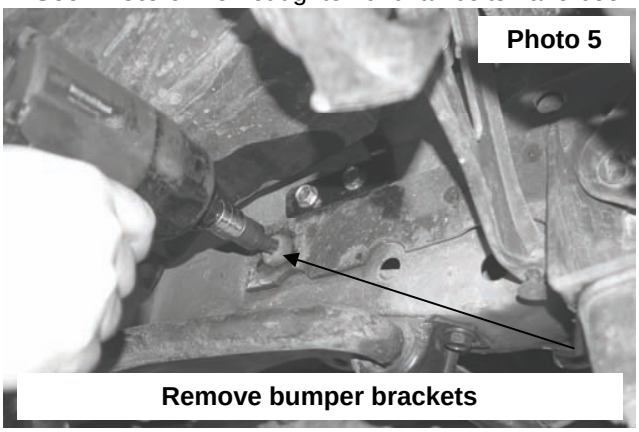

Remove bumper brackets

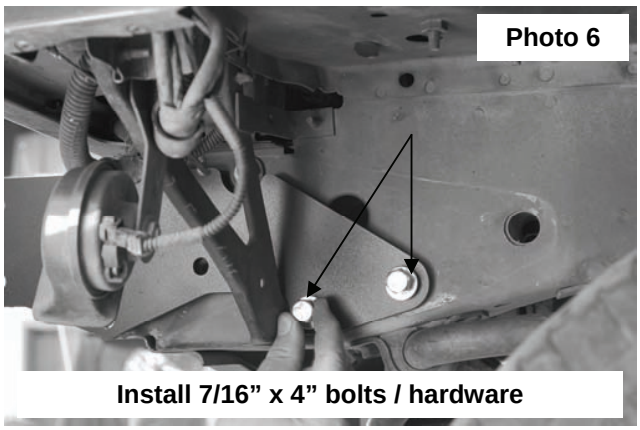

Install 7/16” x 4” bolts / hardware

8. Install the supplied 10mm x 35mm bolts as shown in the bracket and threaded hole in the uni-body. (Driver Side Shown) Do not tighten until all bolts are installed in bracket. **See Photo 7.**
9. Install the supplied 7/16” x 1 1/4” bolts, washer and lock nuts as shown in **Photo 8.**

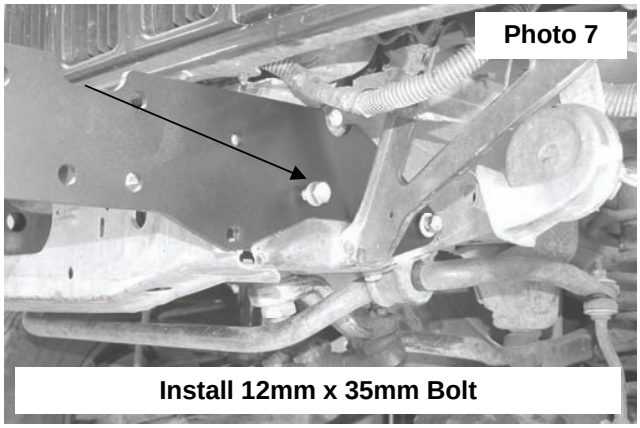
Photo 7
Install 12mm x 35mm Bolt

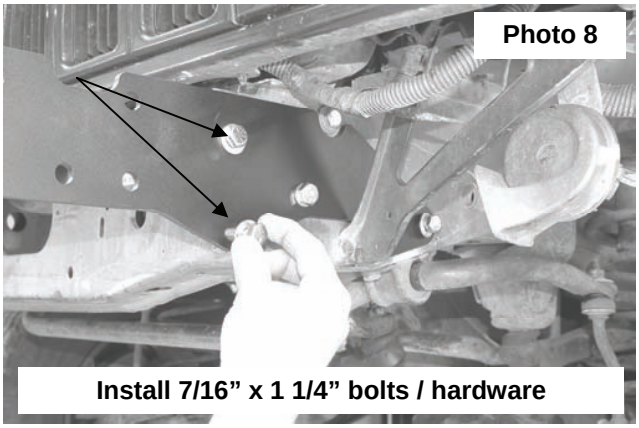
Photo 8
Install 7/16” x 1 1/4” bolts / hardware

10. Proceed to pass side to install bracket.
11. Place the bracket on the uni-body and install the forward 7/16” x 4” bolt, washers & lock nuts, the 10mm x 35mm bolt in threaded hole in uni-body and the two 7/16” x 1 1/4” bolts, washers and lock nuts. **See Photo 9.**
12. Drill the rear hole using a 15/32” drill bit and install the 7/16” x 4” bolts, washers and lock nut. **See Photo 10.**

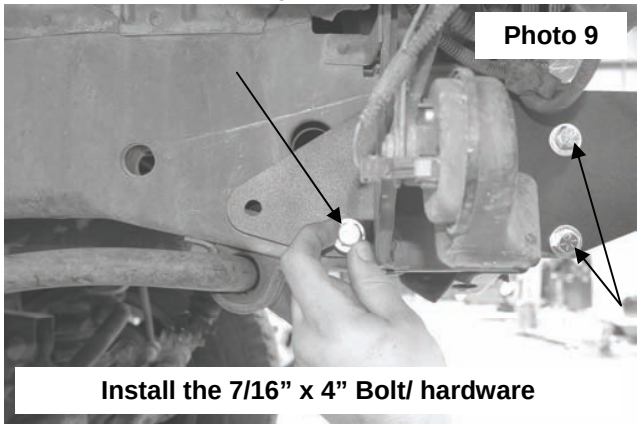
Photo 9
Install the 7/16” x 4” Bolt/ hardware

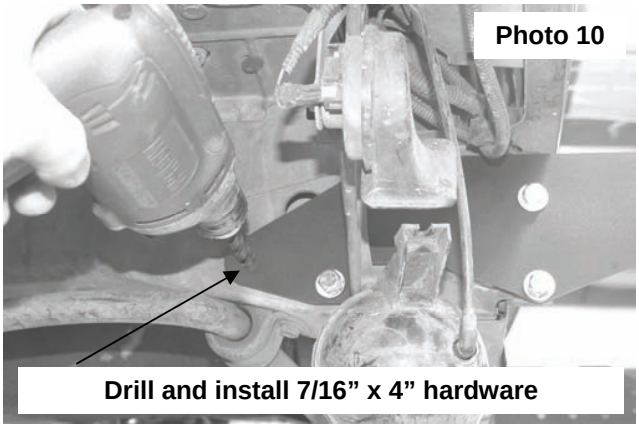
Photo 10
Drill and install 7/16” x 4” hardware

13. Tighten the 7/16” hardware using a 9/16” socket/ wrench and the 10mm using a 17mm socket.
14. Install the winch plate in the bumper as shown with the supplied qty 8 (4 per side)1/2” x 1 1/2” bolts, washers and lock nuts. **Install the fairlead using the supplied 12mm x 35mm bolts and hardware before tightening the winch plate.** Tighten the 1/2” hardware with a 3/4” socket / wrench only after both sides of the winch plate has been installed in the bumper and the fairlead bolts using an 18mm socket. **See Photo 11.**
15. Install the bumper on the bumper brackets with the supplied qty 14 (7 per side) 1/2” - 1 1/2” bolts, washers and lock nuts. **See Photo 12.** Tighten using a 3/4” socket / wrench.

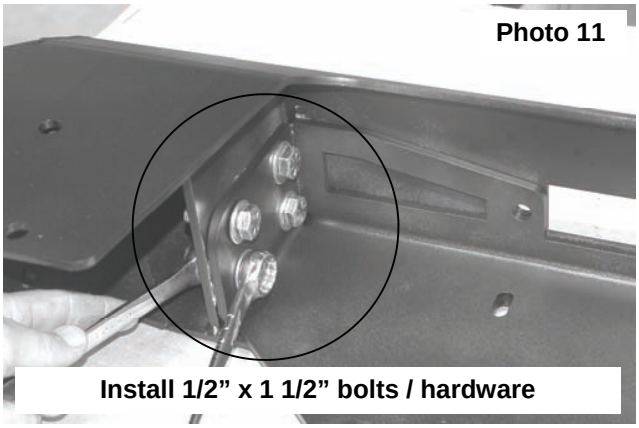
Photo 11
Install 1/2” x 1 1/2” bolts / hardware

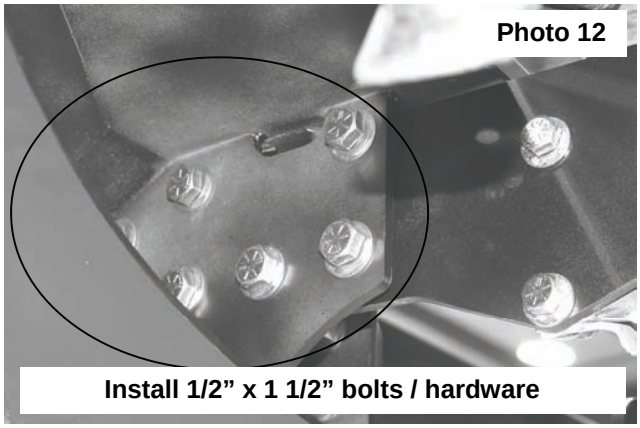
Photo 12
Install 1/2” x 1 1/2” bolts / hardware

16. Included in this kit are bolts and nuts to mount the optional stinger, light-bar and d-ring kits. If these kits are not purchased with this bumper, the hardware can be installed to cover the accessory locations. If desired install the supplied 1/2” x 1 1/2” button head bolts in the top of the winch bumper and the front of the winch bumper.

MAINTENANCE INFORMATION

1. Failure to securely tighten all bolts on the winch plate, winch, and fairlead can result in product failure, which may result in vehicle damage or operator injury. Check that all bolts are securely tightened prior to use.
2. Inspect all nuts and bolts on the winch, winch mount, and related hardware prior to each use. Tighten all nuts that appear to be loose. Stripped, fractured, or bent bolts or nuts should be replaced.
3. Periodically check bolt for tightness.

OPTIONAL ACCESSORIES FOR XJ WINCH BUMPER
CALL YOUR ROUGH COUNTRY DEALER TO ORDER



WINCH COVER



ROUGH COUNTRY ELECTRIC WINCH
AVAILABLE IN 9500LB & 12000LB



PART # 1055 STINGER KIT



PART # RS110 SYNTHETIC ROPE



PART # 1056 D-RING KIT



PART # 1058 LIGHT BAR/ WINCH GUARD



PART # RS120 WINCH
EXTENSION STRAP

THANK YOU FOR CHOOSING ROUGH COUNTRY FOR YOUR OFF ROAD NEEDS.