TRAIL FORTRESS

BUILT FOR THE TRAIL. CHECKED FOR YOUR TRUCK.

Rough Country 10200 Installation Instructions

Universal Air Compressor Mounting Bracket, 11-Gauge Steel

Part number: 10200

trailfortress.com/universal-air-compressor-mounting-bracket-11-gauge-steel-rough-country-10200

Scan for fitment, price and install help

921102000

ROUGH COUNTRY
SUSPENSION SYSTEMS®

Universal Air Compressor Mount

Thank you for choosing Rough Country for all your vehicle needs.

Please read instructions before beginning installation. Check the kit hardware against the kit contents shown below. Be sure you have all needed parts and know where they go.
If question exist, please call us @1-800-222-7023. We will be happy to answer any questions concerning this product.
Check all fasteners for proper torque. Check to ensure for adequate clearance between all components.
Periodically check all hardware for tightness.

Kit Contents:
Air Compressor Mount x1

Tools Needed:
Drill
11/32” Drill Bit
9/16” Socket/Wrench

Hardware Included:
3/8” x 1” Self Tapping Bolts x2

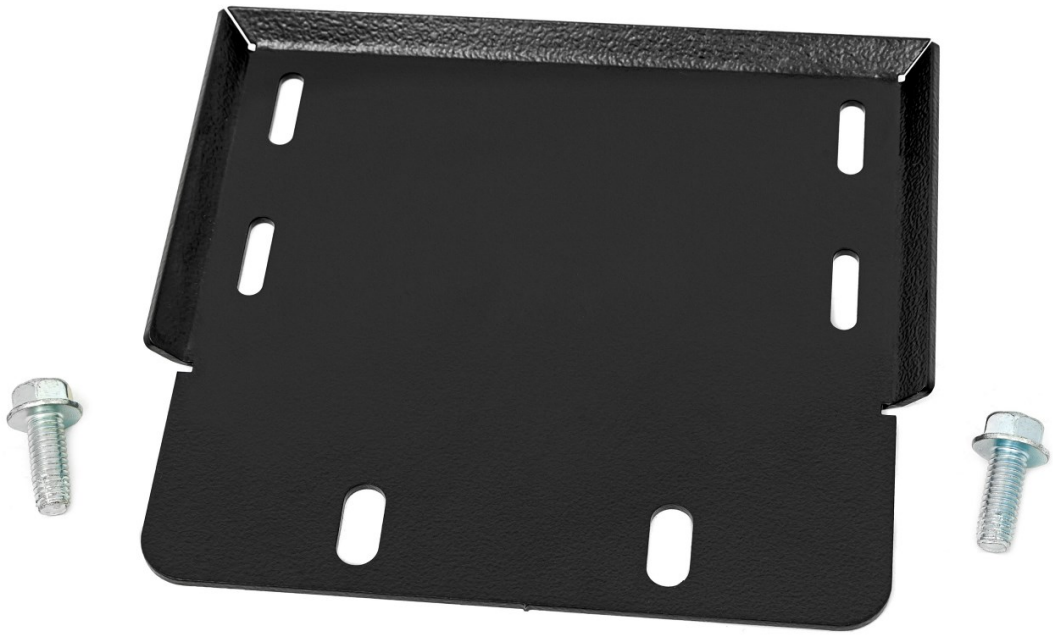

Torque Specs:

Size	Grade 5	Grade 8	Size	Class 8.8	Class 10.9
5/16”	15 ft/lbs	20ft/lbs	6MM	5ft/lbs	9ft/lbs
3/8”	30 ft/lbs	35ft/lbs	8MM	18ft/lbs	23ft/lbs
7/16”	45 ft/lbs	60ft/lbs	10MM	32ft/lbs	45ft/lbs
1/2”	65 ft/lbs	90ft/lbs	12MM	55ft/lbs	75ft/lbs
9/16”	95 ft/lbs	130ft/lbs	14MM	85ft/lbs	120ft/lbs
5/8”	135ft/lbs	175ft/lbs	16MM	130ft/lbs	165ft/lbs

INSTALLATION INSTRUCTIONS

1. Find a good area along the frame to mount the air compressor away from heat or harms way.
2. Hold the mount flush against the bottom of the frame and mark the frame through the holes using a paint pen.
3. Remove the mount and drill the marked holes using an 11/32” (or R) drill bit.
4. Install the mount to the frame with the supplied 3/8” x 1” self-tapping bolts using a 9/16” socket/wrench.

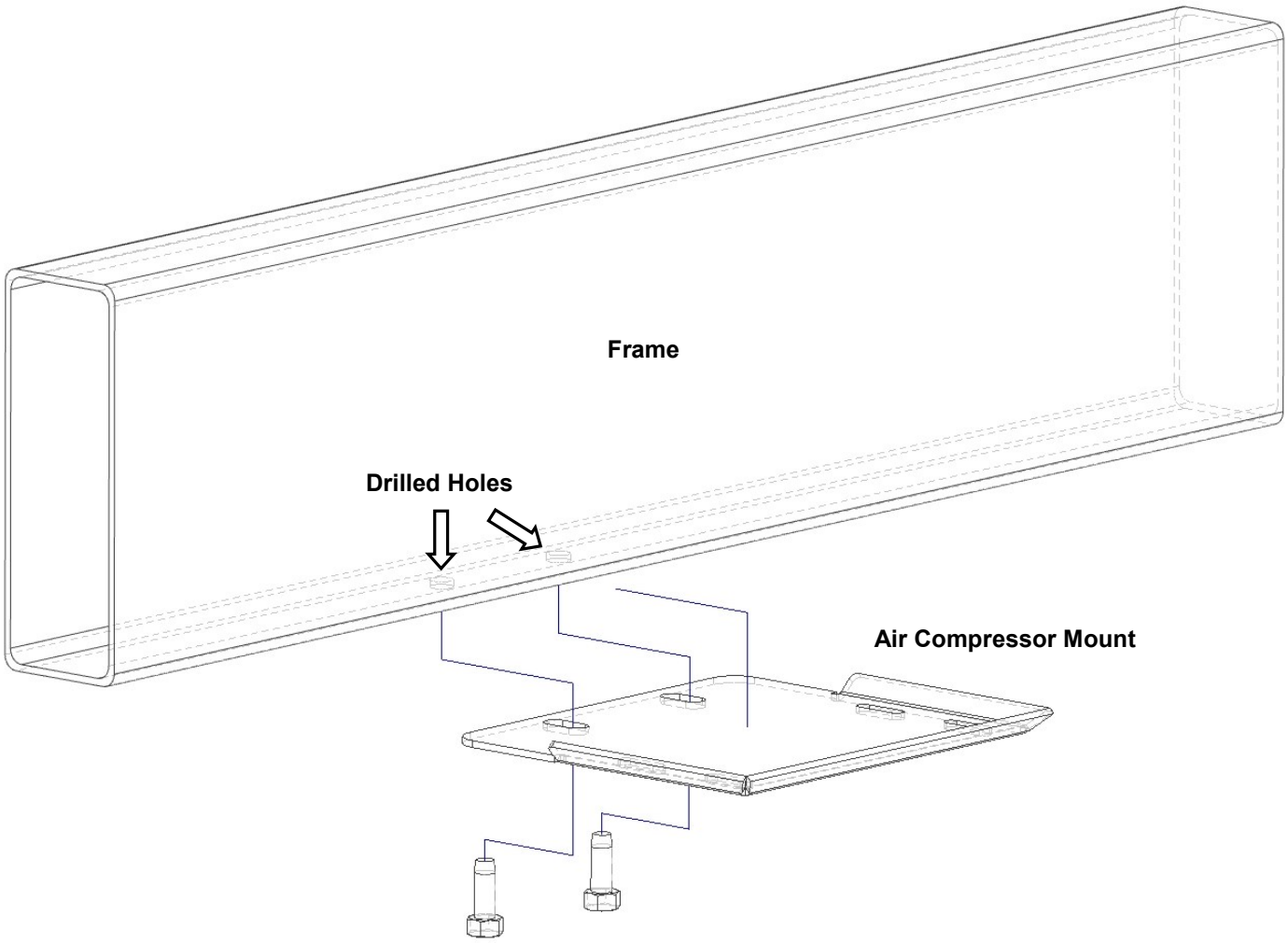

By purchasing any item sold by Rough Country, LLC, the buyer expressly warrants that he/she is in compliance with all applicable, State, and Local laws and regulations regarding the purchase, ownership, and use of the item. It shall be the buyers responsibility to comply with all Federal, State and Local laws governing the sales of any items listed, illustrated or sold. The buyer expressly agrees to indemnify and hold harmless Rough Country, LLC for all claims resulting directly or indirectly from the purchase, ownership, or use of the items.