RIGID Industries 905513BLK Installation Instructions

SR-Q Series PRO Midnight Edition, Spot Diffused, Pair

Part number: 905513BLK

trailfortress.com/rigid-industries-sr-q-series-pro-midnight-edition-spot-diffused-surface-mount-pair-905513blk

Scan for fitment, price and install help

MOUNT INSTRUCTIONS & DIAGRAM FOR
SR-Q SERIES

1. Place 5/16”- 18 Carriage Bolt (E) into Mounting Bracket (D).
2. Use 1/4”- 20 Allen Socket Head (B) and 1/4”- 20 Nyloc Nut (C) to attach Mounting Bracket (D) to Housing (A).
3. Drill a 5/16” hole into desired mounting location.
4. Use 5/16”: Flat Washer (F), Lock Washer (G), and Nut (H) to secure light assembly to vehicle.
5. Tighten all hardware.



A - LED Light (Housing)
B - 1/4” - 20 Allen Socket Head
C - 1/4” - 20 Nyloc Nut
D - Mounting Bracket
E - 5/16”- 18 Carriage Bolt
F - 5/16” Carriage Washer
G - 5/16” Carriage Lock Washer
H - 5/16”- 18 Carriage Nut

ALSO AVAILABLE - LIGHT COVERS
(Sold Separately)

COLOR OPTIONS

AMBER | CLEAR | SMOKE | RED | SOLID BLACK | SOLID WHITE | GREEN | BLUE



D-SERIES SHOWN WITH AMBER | D-SS SHOWN WITH RED | SR-Q SERIES SHOWN WITH GREEN

WARRANTY INFORMATION

For warranty information,
visit www.rigidindustries.com/about/warranty

779 N Colorado St, Gilbert, AZ 85233 • 855-760-5337
www.rigidindustries.com

Rigid Industries, SR-Q Series, D-Series and D-SS and Rigid Industries are registered and/or common law marks owned by JST Performance, LLC, a Delaware limited liability company d/b/a Rigid Industries.

IS-D-SRQ-C

RIGID

INSTRUCTIONS

FOR THE FOLLOWING LIGHTS:
D-SERIES®, D-SS™ & SR-Q SERIES®

THANK YOU FOR PURCHASING RIGID INDUSTRIES’ PRODUCTS.
Please read through all of these Instructions and tips before proceeding with the installation. We do our best to provide a simple installation process for all applications however a professional insallation is always recommended.

It is strongly recommended that this product be installed by a professional.

*MOUNT INSTRUCTIONS & DIAGRAM FOR
D-SERIES & D-SS

1. Place 5/16”- 18 Carriage Bolt (E) into Mounting Bracket (D).
2. Use M6 Allen Socket Head (B) and M6 Nyloc Nut (C) to attach Mounting Bracket (D) to Housing (A).
3. Drill a 5/16” hole into desired mounting location.
4. Use 5/16”: Flat Washer (F), Lock Washer (G), and Nut (H) to secure light assembly to vehicle.
5. Tighten all hardware.



*D-Series LED Light housing shown on this Diagram.

A - LED Light (Housing)
B - M6 Allen Socket Head (2)
C - M6 Nyloc Nut (2)
D - Mounting Bracket
E - 5/16”- 18 Carriage Bolt
F - 5/16” Carriage Washer
G - 5/16” Carriage Lock Washer
H - 5/16”- 18 Carriage Nut

* Bracket can be reversed for additional mounting configurations

MOUNT INSTRUCTIONS & DIAGRAM FOR
SR-Q SERIES

1. Place 5/16”- 18 Carriage Bolt (E) into Mounting Bracket (D).
2. Use 1/4”- 20 Allen Socket Head (B) and 1/4”- 20 Nyloc Nut (C) to attach Mounting Bracket (D) to Housing (A).
3. Drill a 5/16” hole into desired mounting location.
4. Use 5/16”: Flat Washer (F), Lock Washer (G), and Nut (H) to secure light assembly to vehicle.
5. Tighten all hardware.



A - LED Light (Housing)
B - 1/4” - 20 Allen Socket Head
C - 1/4” - 20 Nyloc Nut
D - Mounting Bracket
E - 5/16”- 18 Carriage Bolt
F - 5/16” Carriage Washer
G - 5/16” Carriage Lock Washer
H - 5/16”- 18 Carriage Nut

ALSO AVAILABLE - LIGHT COVERS
(Sold Separately)

COLOR OPTIONS

AMBER | CLEAR | SMOKE | RED | SOLID BLACK | SOLID WHITE | GREEN | BLUE



D-SERIES SHOWN WITH AMBER | D-SS SHOWN WITH RED | SR-Q SERIES SHOWN WITH GREEN

WARRANTY INFORMATION

For warranty information,
visit www.rigidindustries.com/about/warranty

779 N Colorado St, Gilbert, AZ 85233 • 855-760-5337
www.rigidindustries.com

Rigid Industries, SR-Q Series, D-Series and D-SS and Rigid Industries are registered and/or common law marks owned by JST Performance, LLC, a Delaware limited liability company d/b/a Rigid Industries.

IS-D-SRQ-C

RIGID

INSTRUCTIONS

FOR THE FOLLOWING LIGHTS:
D-SERIES®, D-SS™ & SR-Q SERIES®

THANK YOU FOR PURCHASING RIGID INDUSTRIES’ PRODUCTS.
Please read through all of these Instructions and tips before proceeding with the installation. We do our best to provide a simple installation process for all applications however a professional insallation is always recommended.

It is strongly recommended that this product be installed by a professional.

*MOUNT INSTRUCTIONS & DIAGRAM FOR
D-SERIES & D-SS

1. Place 5/16”- 18 Carriage Bolt (E) into Mounting Bracket (D).
2. Use M6 Allen Socket Head (B) and M6 Nyloc Nut (C) to attach Mounting Bracket (D) to Housing (A).
3. Drill a 5/16” hole into desired mounting location.
4. Use 5/16”: Flat Washer (F), Lock Washer (G), and Nut (H) to secure light assembly to vehicle.
5. Tighten all hardware.

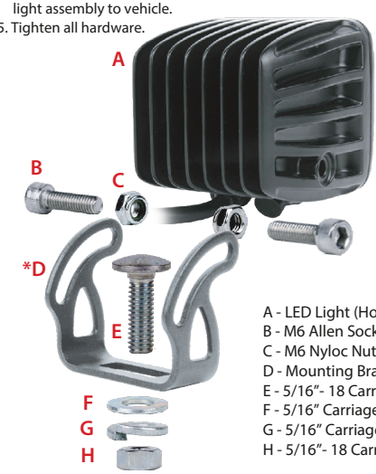

*D-Series LED Light housing shown on this Diagram.

A - LED Light (Housing)
B - M6 Allen Socket Head (2)
C - M6 Nyloc Nut (2)
D - Mounting Bracket
E - 5/16”- 18 Carriage Bolt
F - 5/16” Carriage Washer
G - 5/16” Carriage Lock Washer
H - 5/16”- 18 Carriage Nut

* Bracket can be reversed for additional mounting configurations

trailfortress.com/rigid-industries-sr-q-series-pro-midnight-edition-spot-diffused-surface-mount-pair-905513blk

WIRING INSTRUCTIONS

IMPORTANT

Always disconnect the vehicle battery terminals before servicing the electrical system

1. When routing wire harness through any metal surface be sure it is free of any sharp edges and protected using wire sheathing or a grommet.

2. **Follow the WIRING DIAGRAM** to ensure proper connection to switch and battery terminals.

3. If connecting to existing wiring, make sure to use appropriate fusing and wire gauge. Be sure to use heat shrink tubing on all connections to ensure a weather tight seal.

4. Be aware of the current rating of your selected switch, if switch rating is less than the amperage required to power your lighting then a relay must be added in line to prevent failure of the switch.

5. Connect the positive and negative battery terminals once all connections have been made and test to verify functionality.

WIRING DIAGRAM FOR
RELAY HARNESS

NOTE: GOLD Spade is the Top of Switch

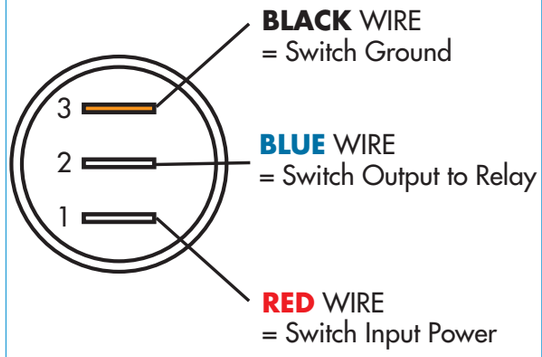

WIRING DIAGRAM FOR
NON-RELAY HARNESS

NOTE: GOLD Spade is the Top of Switch

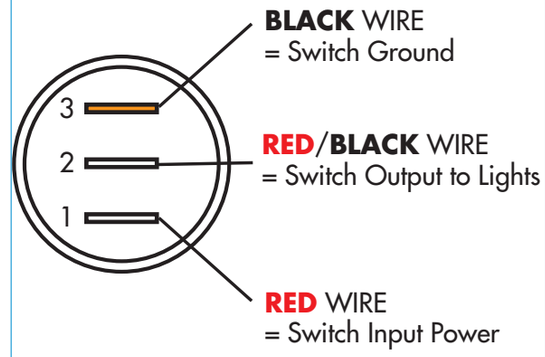

INSTALLED PHOTO FEATURING D-SS



Your installation is now complete.

Welcome to the Rigid Nation!

WIRING INSTRUCTIONS

IMPORTANT

Always disconnect the vehicle battery terminals before servicing the electrical system

1. When routing wire harness through any metal surface be sure it is free of any sharp edges and protected using wire sheathing or a grommet.

2. **Follow the WIRING DIAGRAM** to ensure proper connection to switch and battery terminals.

3. If connecting to existing wiring, make sure to use appropriate fusing and wire gauge. Be sure to use heat shrink tubing on all connections to ensure a weather tight seal.

4. Be aware of the current rating of your selected switch, if switch rating is less than the amperage required to power your lighting then a relay must be added in line to prevent failure of the switch.

5. Connect the positive and negative battery terminals once all connections have been made and test to verify functionality.

WIRING DIAGRAM FOR
RELAY HARNESS

NOTE: GOLD Spade is the Top of Switch

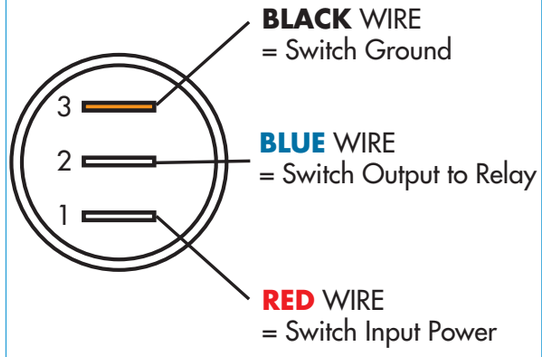

WIRING DIAGRAM FOR
NON-RELAY HARNESS

NOTE: GOLD Spade is the Top of Switch

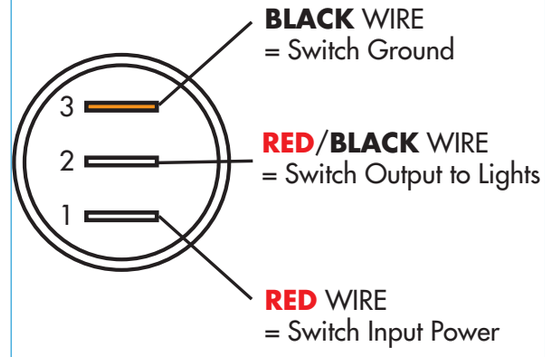

INSTALLED PHOTO FEATURING D-SS



Your installation is now complete.

Welcome to the Rigid Nation!