# RIGID Industries 901802 Installation Instructions

Chase Rear-Facing 28 Inch Light Bar, Surface Mount

Part number: 901802

trailfortress.com/rigid-industries-chase-rear-facing-27-mode-5-color-led-light-bar-28-inch-surface-mount-901802

Scan for fitment, price and install help

# INSTALLATION INSTRUCTIONS

# CHASE LIGHT BAR®



**REPLACEMENT/ALTERNATIVE BRACKET KITS:**
46598 - Chase Bar Tube Mount Kit/2
46599 - Chase Bar Surface Mount Kit/2

## *THESE INSTRUCTIONS ARE FOR THE FOLLOWING LIGHTS:
## CHASE LIGHT BAR PN: 901801 & 901802

## IMPORTANT

**THANK YOU FOR PURCHASING RIGID INDUSTRIES' PRODUCTS FOR YOUR VEHICLE.**
Please read through all of these Instructions and tips before proceeding with the installation.
We do our best to provide a simple installation process for all applications however a professional installation is always recommended.

**Always disconnect any power sources connected to your vehicle before servicing fuses or electrical systems.**

trailfortress.com/rigid-industries-chase-rear-facing-27-mode-5-color-led-light-bar-28-inch-surface-mount-901

# MOUNTING INSTRUCTIONS

## TUBE MOUNT

1. Place 4 square nuts into each channel on the back of the light

2. Align the 4 square nuts with the holes on each of the two mount pucks

3. Take the 8 socket head cap screws (shorter) and loosely screw them into the square nuts

4. Slide the mount pucks into the desired location and tighten the socket head cap screws to 6 in-lbs

5. Insert 2 rubber bumpers into the sides of each mount puck

6. Place the 2 tube clamps onto the vehicle

7. Insert 2 socket head cap screws (longer) into each tube clamp and loosely thread on a nut to each screw

8. Position the tube clamps to align with mount pucks

9. Slide the mount pucks over the tube mount screws. Tighten the tube mount screws to 6 in-lbs.

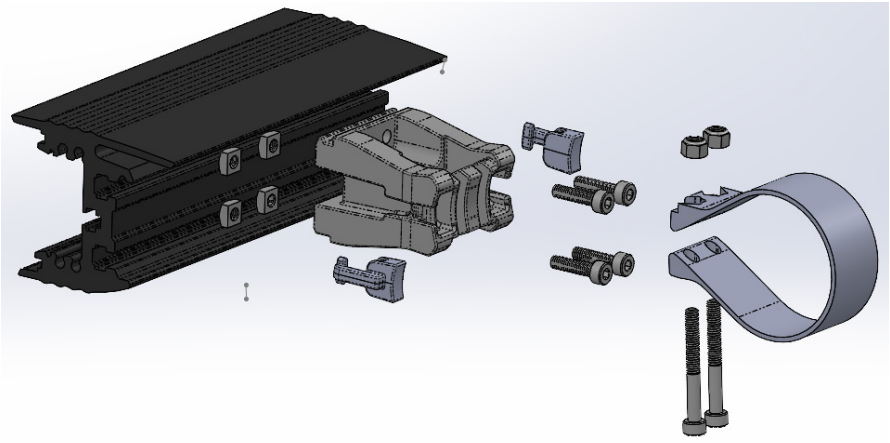

# MOUNTING INSTRUCTIONS

## SURFACE MOUNT

1. Place 2 square nuts into each channel on the back of the light

2. Align the 2 square nuts with the holes on each of the two mount pucks

3. Take the 4 socket head cap screws (shorter) and loosely screw them into the square nuts

4. Slide the mount pucks into the desired location and tighten the socket head cap screws to 6 in-lbs

5. Place the surface mount brackets around the mount puck and insert 2 socket head cap screws (longer) through the mounts and pucks and loosely tighten a nut to each screw.

6. Install the mounts on a surface using the flat washer, lock washer, carriage bolt, and large hex nut.

7. Tilt the light to the desired angle and tighten the socket head cap screws (longer) to 6 in-lbs.

Note: The surface mount can be mounted from the top or the bottom

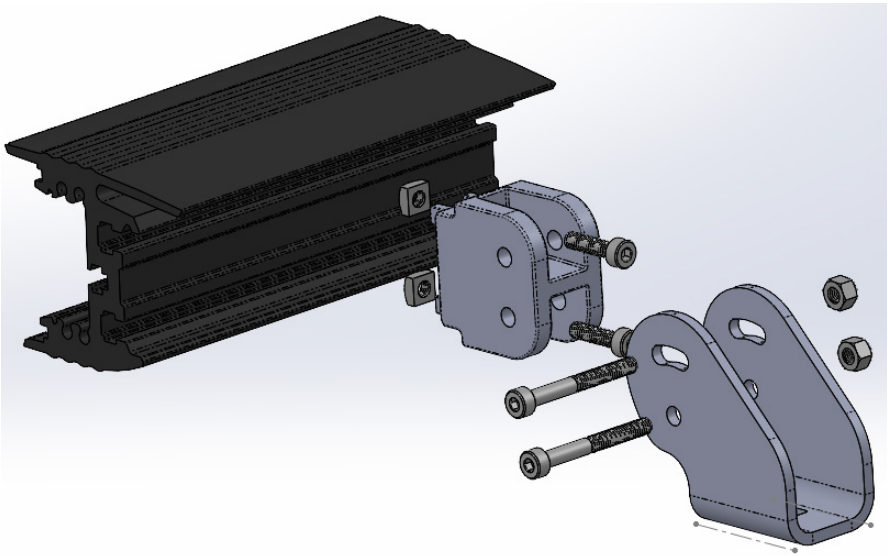

# WIRING INSTRUCTIONS

**WIRING DIAGRAM**

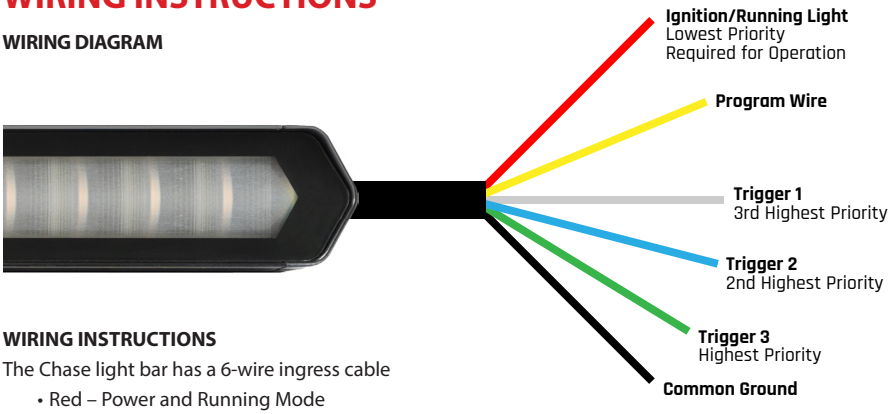


**WIRING INSTRUCTIONS**

The Chase light bar has a 6-wire ingress cable

- Red – Power and Running Mode
- Black – Common Ground
- White – Trigger 1
- Blue – Trigger 2
- Green – Trigger 3
- Yellow – Program wire

**THE RED AND BLACK WIRE MUST BE CONNECTED FOR THE LIGHT TO FUNCTION, THE THREE TRIGGERS ARE OPTIONAL**

- Connect the Red wire to 12V and the Black wire to ground
- Tap the Yellow program wire to 12V to cycle programs & select the desired running mode
- Once the mode is selected, stop tapping the Yellow wire. The mode is saved as the selected option for the Red wire.
- The red wire must be connected to 12V for the remaining triggers to be programmed and functional

**PROGRAMMING THE TRIGGERS**

NOTE: It is not required to program the three trigger wires

- With the Red and Black wires connected, connect the White Trigger 1 wire to 12v
- Tap the Yellow program wire to 12v to select the desired mode
- Once the mode is selected, stop tapping the Yellow wire to power. The mode is now saved as the selected option for the White wire.
- Connect the white wire to the appropriate circuit, ie brake, reverse, turn signal, switch, etc.
- Repeat the steps to program the Blue Trigger 2 wire and Green Trigger 3 wire
- When mode selection is complete, place a wire nut over the Yellow Program wire

**EACH WIRE HAS A SET PRIORITY LEVEL**

- Highest Priority – Green – Trigger 3
- Next Highest Priority – Blue – Trigger 2
- Next Highest Priority – White – Trigger 1
- Lowest Priority – Red – Power
- If multiple triggers are powered the highest priority wire will overwrite or overlap the lower priority modes
- If the white Trigger 1 wire is connected to the brake circuit, when the brake is initiated it will overlap the running mode programmed on the red wire.

# AVAILABLE MODES

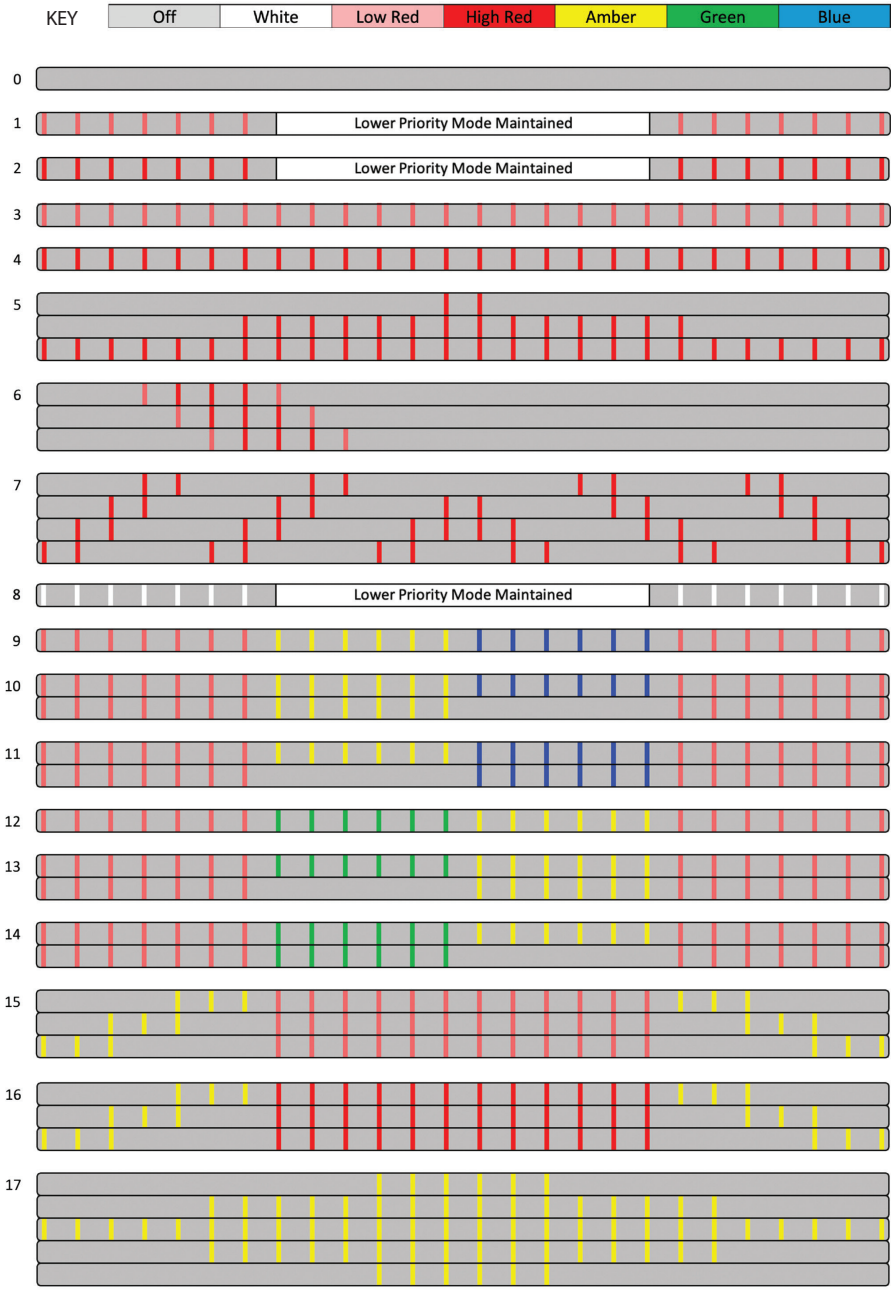

# AVAILABLE MODES

| | | |
|---|---|---|
| 18 | | |
| 19 | | |
| 20 | | |
| 21 | | |
| 22 | | Lower Priority Mode Maintained |
| | | Lower Priority Mode Maintained |
| | | Lower Priority Mode Maintained |
| 23 | | Lower Priority Mode Maintained |
| | | Lower Priority Mode Maintained |
| | | Lower Priority Mode Maintained |
| | | Lower Priority Mode Maintained |
| 24 | | Lower Priority Mode Maintained |
| | | Lower Priority Mode Maintained |
| 25 | Lower Priority Mode Maintained | |
| | Lower Priority Mode Maintained | |
| | Lower Priority Mode Maintained | |
| 26 | Lower Priority Mode Maintained | |
| | Lower Priority Mode Maintained | |
| | Lower Priority Mode Maintained | |
| | Lower Priority Mode Maintained | |
| 27 | Lower Priority Mode Maintained | |
| | Lower Priority Mode Maintained | |



## NOTES:



**Your installation is now complete.**

# Welcome to the RIGID Nation!

## WARRANTY INFORMATION

For warranty information, visit www.rigidindustries.com/about/warranty

779 N Colorado St, Gilbert, AZ 85233 • 855-760-5337
www.rigidindustries.com

RIGID and Rigid Industries are registered and/or common law marks owned by JST Performance, LLC, a Delaware limited liability company d/b/a Rigid Industries.

11-13819-A

trailfortress.com/rigid-industries-chase-rear-facing-27-mode-5-color-led-light-bar-28-inch-surface-mount-901