RIGID Industries 901802 Installation Instructions

Chase Rear-Facing 28 Inch Light Bar, Surface Mount

Part number: 901802

trailfortress.com/rigid-industries-chase-rear-facing-27-mode-5-color-led-light-bar-28-inch-surface-mount-901802

Scan for fitment, price and install help

INSTALLATION INSTRUCTIONS

CHASE LIGHT BAR®



REPLACEMENT/ALTERNATIVE BRACKET KITS:
46598 - Chase Bar Tube Mount Kit/2
46599 - Chase Bar Surface Mount Kit/2

*THESE INSTRUCTIONS ARE FOR THE FOLLOWING LIGHTS:
CHASE LIGHT BAR PN: 901801 & 901802

IMPORTANT

THANK YOU FOR PURCHASING RIGID INDUSTRIES' PRODUCTS FOR YOUR VEHICLE.
Please read through all of these Instructions and tips before proceeding with the installation.
We do our best to provide a simple installation process for all applications however a professional installation is always recommended.

Always disconnect any power sources connected to your vehicle before servicing fuses or electrical systems.

trailfortress.com/rigid-industries-chase-rear-facing-27-mode-5-color-led-light-bar-28-inch-surface-mount-901

MOUNTING INSTRUCTIONS

TUBE MOUNT

1. Place 4 square nuts into each channel on the back of the light

2. Align the 4 square nuts with the holes on each of the two mount pucks

3. Take the 8 socket head cap screws (shorter) and loosely screw them into the square nuts

4. Slide the mount pucks into the desired location and tighten the socket head cap screws to 6 in-lbs

5. Insert 2 rubber bumpers into the sides of each mount puck

6. Place the 2 tube clamps onto the vehicle

7. Insert 2 socket head cap screws (longer) into each tube clamp and loosely thread on a nut to each screw

8. Position the tube clamps to align with mount pucks

9. Slide the mount pucks over the tube mount screws. Tighten the tube mount screws to 6 in-lbs.

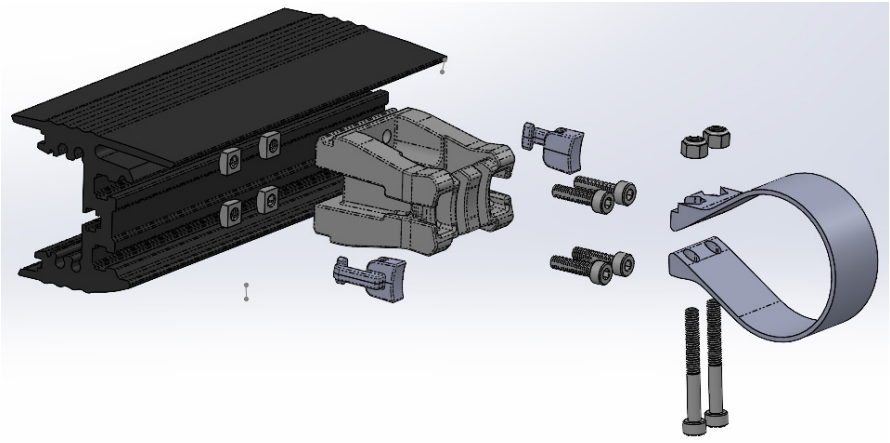

MOUNTING INSTRUCTIONS

SURFACE MOUNT

1. Place 2 square nuts into each channel on the back of the light

2. Align the 2 square nuts with the holes on each of the two mount pucks

3. Take the 4 socket head cap screws (shorter) and loosely screw them into the square nuts

4. Slide the mount pucks into the desired location and tighten the socket head cap screws to 6 in-lbs

5. Place the surface mount brackets around the mount puck and insert 2 socket head cap screws (longer) through the mounts and pucks and loosely tighten a nut to each screw.

6. Install the mounts on a surface using the flat washer, lock washer, carriage bolt, and large hex nut.

7. Tilt the light to the desired angle and tighten the socket head cap screws (longer) to 6 in-lbs.

Note: The surface mount can be mounted from the top or the bottom

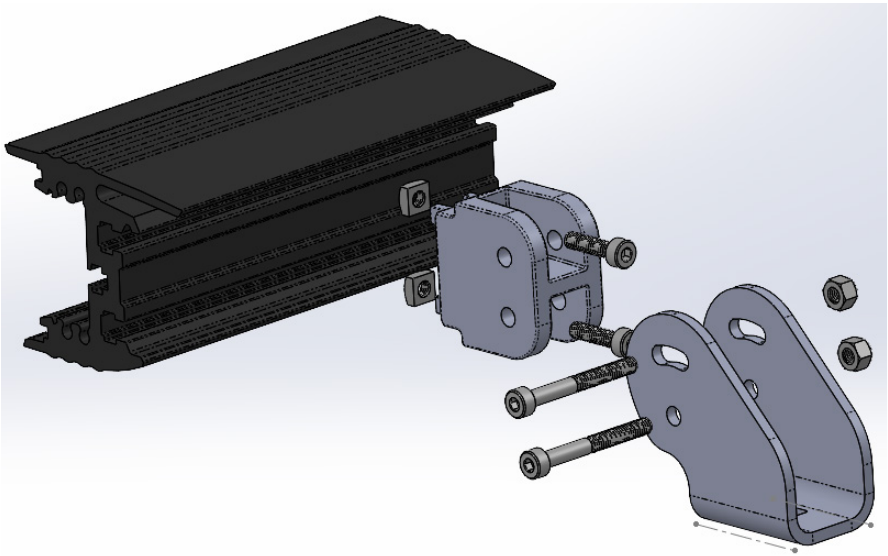

WIRING INSTRUCTIONS

WIRING DIAGRAM

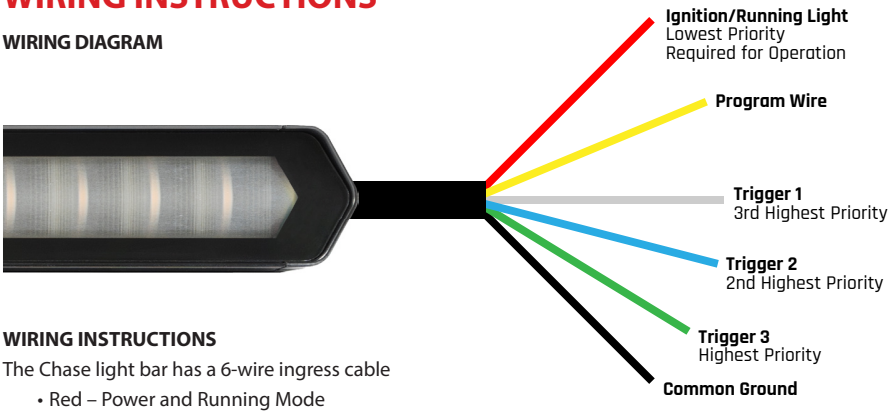

WIRING INSTRUCTIONS

The Chase light bar has a 6-wire ingress cable

- Red – Power and Running Mode
- Black – Common Ground
- White – Trigger 1
- Blue – Trigger 2
- Green – Trigger 3
- Yellow – Program wire

THE RED AND BLACK WIRE MUST BE CONNECTED FOR THE LIGHT TO FUNCTION, THE THREE TRIGGERS ARE OPTIONAL

- Connect the Red wire to 12V and the Black wire to ground
- Tap the Yellow program wire to 12V to cycle programs & select the desired running mode
- Once the mode is selected, stop tapping the Yellow wire. The mode is saved as the selected option for the Red wire.
- The red wire must be connected to 12V for the remaining triggers to be programmed and functional

PROGRAMMING THE TRIGGERS

NOTE: It is not required to program the three trigger wires

- With the Red and Black wires connected, connect the White Trigger 1 wire to 12v
- Tap the Yellow program wire to 12v to select the desired mode
- Once the mode is selected, stop tapping the Yellow wire to power. The mode is now saved as the selected option for the White wire.
- Connect the white wire to the appropriate circuit, ie brake, reverse, turn signal, switch, etc.
- Repeat the steps to program the Blue Trigger 2 wire and Green Trigger 3 wire
- When mode selection is complete, place a wire nut over the Yellow Program wire

EACH WIRE HAS A SET PRIORITY LEVEL

- Highest Priority – Green – Trigger 3
- Next Highest Priority – Blue – Trigger 2
- Next Highest Priority – White – Trigger 1
- Lowest Priority – Red – Power
- If multiple triggers are powered the highest priority wire will overwrite or overlap the lower priority modes
- If the white Trigger 1 wire is connected to the brake circuit, when the brake is initiated it will overlap the running mode programmed on the red wire.

AVAILABLE MODES

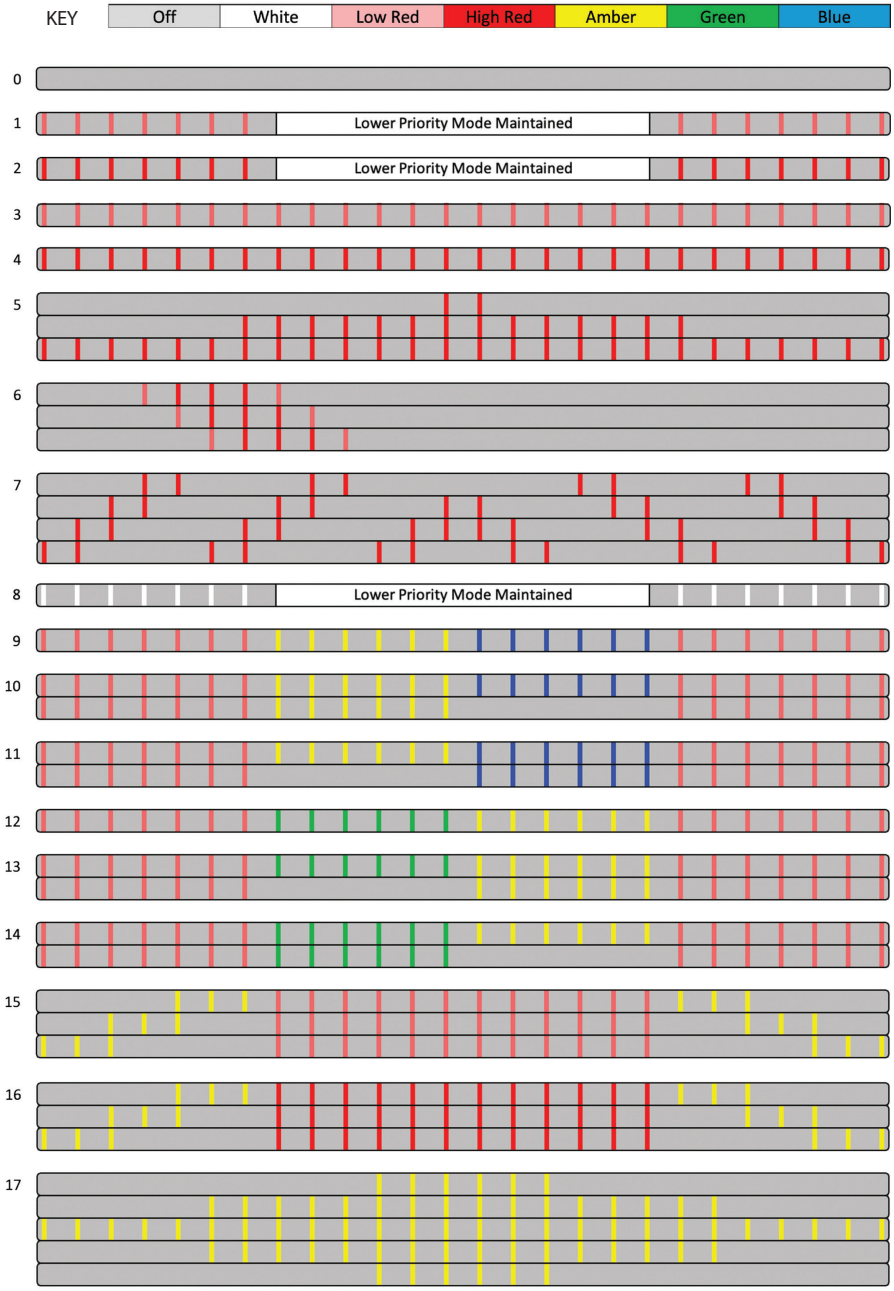

AVAILABLE MODES

18		
19		
20		
21		
22		Lower Priority Mode Maintained
		Lower Priority Mode Maintained
		Lower Priority Mode Maintained
23		Lower Priority Mode Maintained
		Lower Priority Mode Maintained
		Lower Priority Mode Maintained
		Lower Priority Mode Maintained
24		Lower Priority Mode Maintained
		Lower Priority Mode Maintained
25	Lower Priority Mode Maintained	
	Lower Priority Mode Maintained	
	Lower Priority Mode Maintained	
26	Lower Priority Mode Maintained	
	Lower Priority Mode Maintained	
	Lower Priority Mode Maintained	
	Lower Priority Mode Maintained	
27	Lower Priority Mode Maintained	
	Lower Priority Mode Maintained	



NOTES:



Your installation is now complete.

Welcome to the RIGID Nation!

WARRANTY INFORMATION

For warranty information, visit www.rigidindustries.com/about/warranty

779 N Colorado St, Gilbert, AZ 85233 • 855-760-5337
www.rigidindustries.com

RIGID and Rigid Industries are registered and/or common law marks owned by JST Performance, LLC, a Delaware limited liability company d/b/a Rigid Industries.

11-13819-A

trailfortress.com/rigid-industries-chase-rear-facing-27-mode-5-color-led-light-bar-28-inch-surface-mount-901