RIGID Industries 88331 Installation Instructions

RDS SR-Series PRO Curved 30 Inch, Spot, Black

Part number: 88331

trailfortress.com/rigid-industries-rds-sr-series-pro-curved-led-light-bar-spot-optic-30-inch-black-housing-88331

Scan for fitment, price and install help

INSTALLATION INSTRUCTIONS

RDS SR-SERIES PRO



IMPORTANT

THANK YOU FOR PURCHASING RIGID PRODUCTS FOR YOUR VEHICLE.

Please read through all of these Instructions and tips before proceeding with the installation.
We do our best to provide a simple installation process for all applications however
a professional installation is always recommended.

Always disconnect any power sources connected to your vehicle before servicing fuses or electrical systems.

trailfortress.com/rigid-industries-rds-sr-series-pro-curved-led-light-bar-spot-optic-30-inch-black-housing-88331

RDS SR-SERIES PRO

Mounting your light bar: Assemble mounting hardware onto the light bar as shown in Figure 1. (The mount bushings are designed to clip in, holding the bolts in place.) If using the short L-brackets, it is recommended that you mark the location of your mounting holes using the assembly, drill the mounting holes, then mount the light bar in its final location, using hardware of your choice.

Figure 1

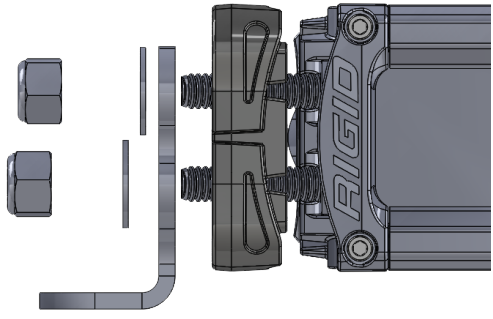

WIRING INSTRUCTIONS

IMPORTANT

Always disconnect any power sources connected to your vehicle before servicing fuses or electrical systems.

Figure 2

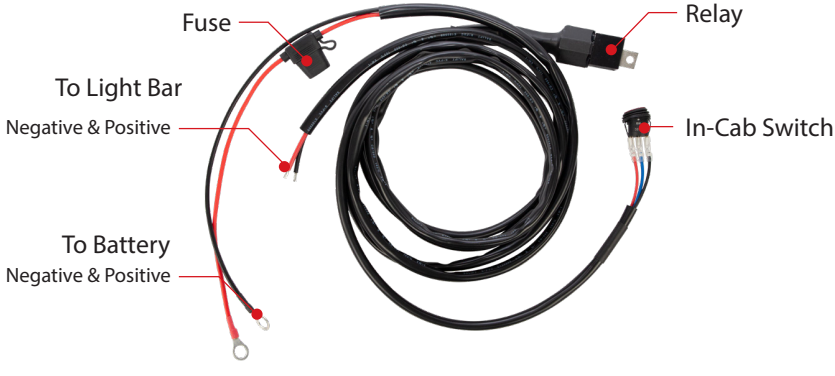

trailfortress.com/rigid-industries-rds-sr-series-pro-curved-led-light-bar-spot-optic-30-inch-black-housing-88331

1. Reference Figure 2.
2. Locate a suitable, "high and dry" location to mount the relay, close to the vehicle battery, in the engine compartment.
3. When routing wire harness through the vehicle firewall (or any sheetmetal panel), make sure there are no sharp edges that could damage your harness. Protect the harness from damage by using a grommet and/or loom and tape.
4. Route the light bar, switch, and battery harnesses through the vehicle to their general locations.
5. Switch should be mounted in cab. Route the switch leads to desired dash location. Mount the switch. (Drilling + file-fitting may be required.) Connect wiring as shown in Figure 3.
6. Connect light bar flying leads to positive and negative harness leads. (RED wire is positive, BLACK wire is negative.)
7. Connect positive and negative battery terminals to vehicle battery. (RED wire is positive, BLACK wire is negative.)
8. Test functionality and adjust / aim your lightbar.
9. Tighten mounting hardware to 75 in-lbs. (~6 ft-lbs)

Figure 3

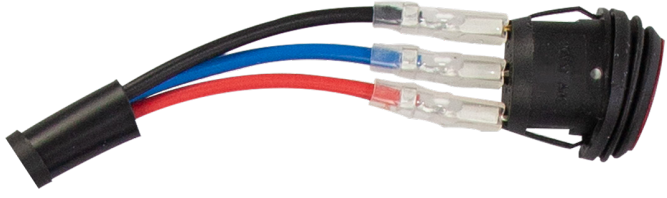

SWITCH WIRING

NOTE: GOLD Spade is the Top of Switch, 3/4" mounting hole required

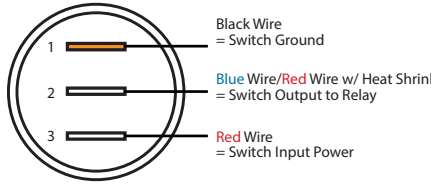

SWITCH WIRING (SINGLE AND SETS)

- P1- Black Wire
  = Switch Ground
- P2 - Blue Wire/Red Wire w/ Heat Shrink
  = Switch Output to Relay
- P3 - Red Wire
  = Switch Input Power

trailfortress.com/rigid-industries-rds-sr-series-pro-curved-led-light-bar-spot-optic-30-inch-black-housing-88331

Wiring: Wire your lights according to the instructions included with the light. Take care to avoid any heat sources and sharp or abrasive surfaces.

Your installation is now complete.
Welcome to the Rigid Nation!

WARRANTY INFORMATION

For warranty information, visit www.rigidindustries.com/about/warranty

779 N Colorado St, Gilbert, AZ 85233 • 855-760-5337
www.rigidindustries.com

RDS SR-Series, RIGID, and Rigid Industries are registered and/or common law marks owned by JST Performance, LLC, a Delaware limited liability company d/b/a Rigid Industries.

11-12699-A

trailfortress.com/rigid-industries-rds-sr-series-pro-curved-led-light-bar-spot-optic-30-inch-black-housing-88331