RIGID Industries 53122 Installation Instructions

SR-L Spreader Pod, 3 Wire, Surface Mount, Red Halo

Part number: 53122

trailfortress.com/rigid-industries-sr-l-series-off-road-spreader-pod-3-wire-surface-mount-red-halo-pair-53122

Scan for fitment, price and install help

INSTALLATION INSTRUCTIONS

SR-L SERIES SPREADER



***THESE INSTRUCTIONS ARE FOR THE FOLLOWING LIGHTS:**
SR-L SERIES SPREADERS

WIRING HARNESS PART #: 40300

IMPORTANT

THANK YOU FOR PURCHASING RIGID INDUSTRIES' PRODUCTS FOR YOUR VEHICLE.
Please read through all of these Instructions and tips before proceeding with the installation.
We do our best to provide a simple installation process for all applications however
a professional installation is always recommended.

Always disconnect any power sources connected to your vehicle
before servicing fuses or electrical systems.

trailfortress.com/rigid-industries-sr-l-series-off-road-spreader-pod-3-wire-surface-mount-red-halo-pair-53122

SURFACE MOUNTING INSTRUCTIONS

STEP 1

Align Nylon Washers with mount hole on the backside of the light as shown .

See Figure 1

FIGURE 1

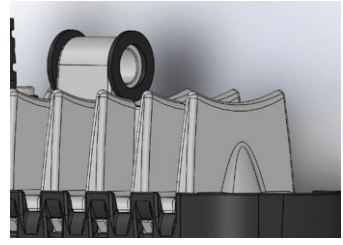

STEP 2

Align Bracket with Nylon washers and mounting hole as shown.

See Figure 2

FIGURE 2

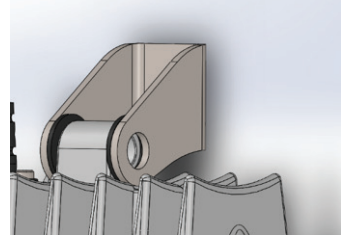

STEP 3

Insert the provided bolt as shown with the head of the bolt opposite the wire ingress as shown.

See Figure 3

FIGURE 3

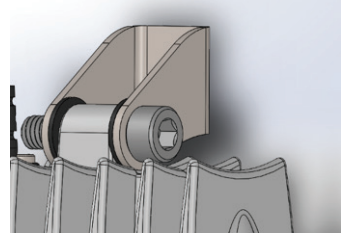

STEP 4

Fasten Nylock nut to the bolt as shown.

See Figure 4

FIGURE 4

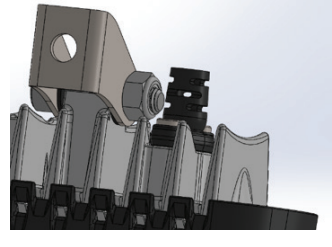

trailfortress.com/rigid-industries-sr-l-series-off-road-spreader-pod-3-wire-surface-mount-red-halo-pair-53122

FLUSH MOUNTING INSTRUCTIONS

STEP 1

Install flush mount bezel using the provided hardware. Use the template as a guide to cut the hole for the light.

See Figure 1

FIGURE 1

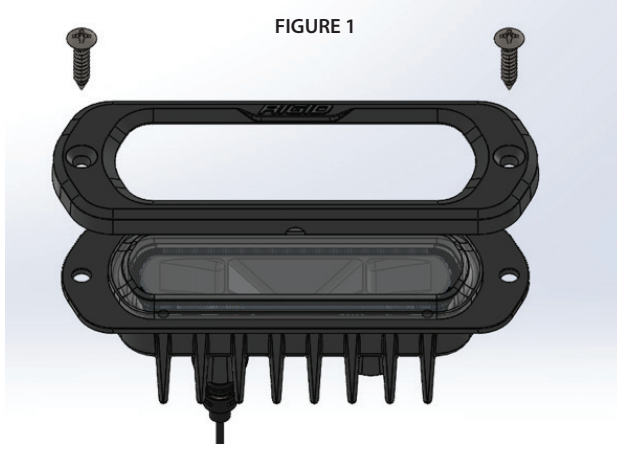

SR-L SERIES SPREADER FLUSH MOUNT TEMPLATE

1) Depending on available tools, either cut to the solid red line or the dashed blue line.
2) Ensure your flat surface allows for the depth of the light.
3) Tape the template, or secure by other means, to your surface.
4) Mark both drill holes and center area of template with a marker.
5) Remove your template and double check your markings by placing bezel over area.
6) After complete check is done to ensure proper alignment, remove marked surface material by using appropriate tools.
7) Remove or file down rough edges and excess trimmings to allow for light to be placed correctly.
9) Insert 2 bolts into light and through the surface, tighten nuts on to bolts evenly.
10) Wire light according to provided instructions.



trailfortress.com/rigid-industries-sr-l-series-off-road-spreader-pod-3-wire-surface-mount-red-halo-pair-53122

WIRING INSTRUCTIONS

3-Position Switch

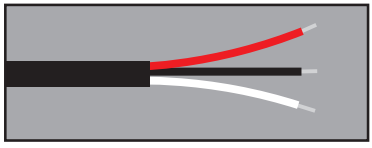

RED WIRE = PROJECTING TRIGGER

BLACK WIRE = GROUND

WHITE WIRE = BACK-LIGHTING TRIGGER

1. Always disconnect the negative battery terminal from the vehicle when working with any electrical circuits.

2. If connecting to existing wiring, make sure to use appropriate fusing and wire gauge. Be sure to use heat shrink tubing on all connections to ensure a weather tight seal.

3. Be aware of the current rating of your selected switch, if switch rating is less than the amperage required to power your lighting then a relay must be added in line to prevent failure of the switch.

4. When routing wiring through any metal surface be sure the surface is free of any sharp edges and protected by using wire sheathing.

5. Follow the wiring image above to ensure you have the correct wire color for the separate back-lighting and projecting LED circuits.

6. Re-connect the negative battery terminal and fully tighten all mounting hardware. Test to verify functionality and beam angle.

Your installation is now complete.

Welcome to the RIGID Nation!

WARRANTY INFORMATION

For warranty information, visit www.rigidindustries.com/about/warranty

779 N Colorado St, Gilbert, AZ 85233 • 855-760-5337
www.rigidindustries.com

RIGID, SL-Series and Rigid Industries are registered and/or common law marks owned by JST Performance, LLC, a Delaware limited liability company d/b/a Rigid Industries.

11-13483-A

trailfortress.com/rigid-industries-sr-l-series-off-road-spreader-pod-3-wire-surface-mount-red-halo-pair-53122