RIGID Industries 504815 Installation Instructions

D-Series PRO SAE Fog Light, White, Pair

Part number: 504815

trailfortress.com/rigid-industries-d-series-pro-sae-fog-white-pair-504815

Scan for fitment, price and install help

INSTALLATION INSTRUCTIONS

SAE COMPLIANT LIGHTS

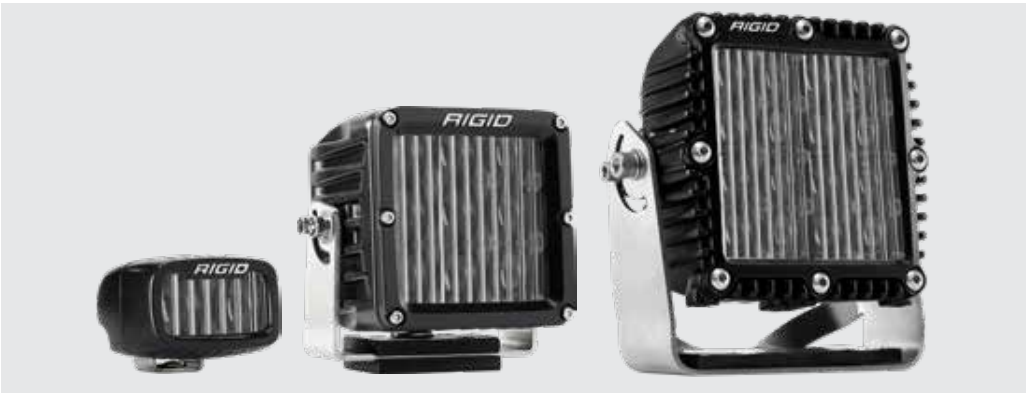

***THESE INSTRUCTIONS ARE FOR THE FOLLOWING LIGHTS:**
(2) SAE SR-M®, (2) SAE D-XL®, (2) SAE Q-SERIES®

IMPORTANT

THANK YOU FOR PURCHASING RIGID INDUSTRIES' PRODUCTS FOR YOUR VEHICLE.
Please read through all of these Instructions and tips before proceeding with the installation.
We do our best to provide a simple installation process for all applications however
a professional installation is always recommended.

Always disconnect any power sources connected to your vehicle before servicing fuses or electrical systems.

trailfortress.com/rigid-industries-d-series-pro-sae-fog-white-pair-504815

WIRING INSTRUCTIONS

SAE D-SERIES

1. Place 5/16-18 Carriage Bolt (E) into Mounting Bracket (D).
2. Use M6 Allen Socket Head (B) and M6 Nyloc Nut (C) to attach Mounting Bracket (D) to Housing (A).
3. Drill a 5/16" hole into desired mounting location.
4. Use 5/16": Flat Washer (F), Lock Washer (G), and Nut (H) to secure light assembly to vehicle.
5. Tighten all hardware.



* Bracket can be reversed for additional mounting configurations

SAE E-SERIES

1. Place 1/4-20x1" hex head bolt (C) into Light housing (A).
2. Next insert mount bushing onto the 1/4-20 hex head bolt (C).
3. Choose desired mounting height and place supplied mounting bracket (E) over mounting stud (C).
4. Secure the mounting assembly with 1/4" flat washer (D) and 1/4-20 Nyloc nut (B).
5. Tighten all hardware.

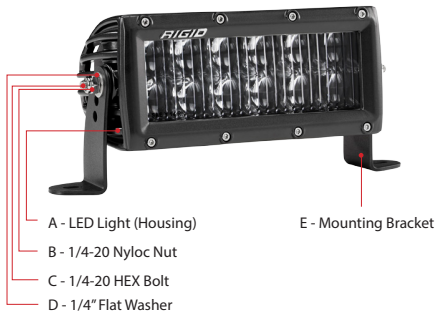

* Long and short brackets provided for additional mounting configurations

SAE SR-SERIES

1. Place 1/4-20x1" hex head bolt (C) into Light housing (A).
2. Next insert mount bushing onto the 1/4-20 hex head bolt (C).
3. Choose desired mounting height and place supplied mounting bracket (E) over mounting stud (C).
4. Secure the mounting assembly with 1/4" flat washer (D) and 1/4-20 Nyloc nut (B).
5. Tighten all hardware.



* Long and short brackets provided for additional mounting configurations

SAE SR-M SERIES

Place 5/16-18 Carriage Bolt (E) into Mounting Bracket (D). Use the M6 Allen Socket Head (B) and the M6 Nyloc Nut (C) to attach the Mounting Bracket (D) to the Housing (A). Drill a 5/16" hole into desired mounting location. Use the 5/16": Flat Washer (F), Split Washer (G), and Nut (H) to secure the light assembly to vehicle. Finally tighten all hardware. *(See Figure below)*



SAE D-XL SERIES

Step 1

Assemble the LED Light Kit by attaching mounting bracket to the housing using the provided mount bushings, bolts, washers and low profile nylock nuts. Place mount bushings into the housing prior to installing mounting bracket. *(See Figure Below)*

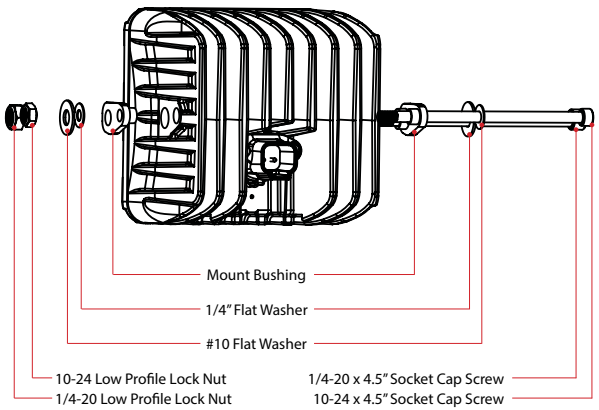

Step 2

Mount completed LED Light Assembly using the remaining bolt, washers, and nut. Vibration Isolators are included in the kit, but are not necessary. A 7/16" hole is required to mount the Light Assembly. (Torque to 212 in/lbs) *(See Figure Below)*

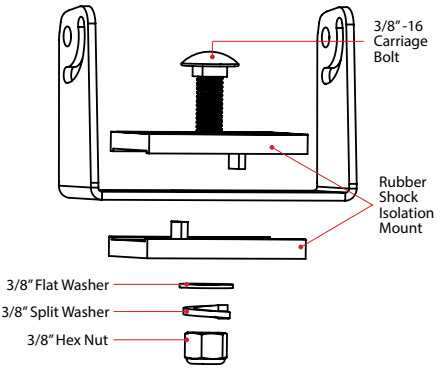

SAE Q-SERIES

Step 1

The illustration blow demonstrates how the nuts will be held in place by the Mount Bushings. This pertains to both the left and right sides of the housing. *(See Figure Below)*

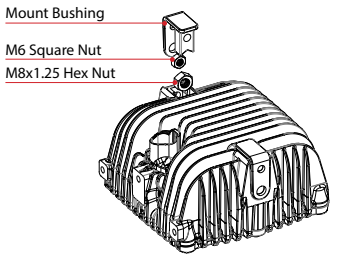

Step 2

You will need to choose if you would like to mount your light in a stationary position or with one larger bolt, giving you the ability to swivel the light.
(Torque to 212 in/lbs) *(See Figure Below)*

Stationary Mount

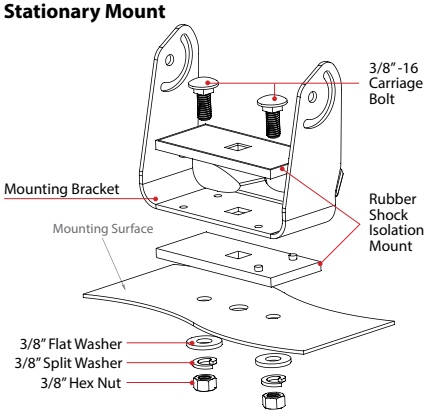

Swivel Mount

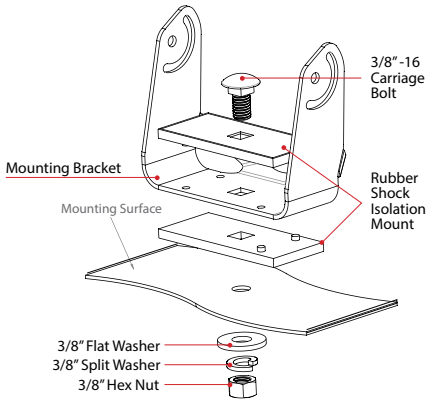

Step 3

Secure light to mounting bracket by following the diagram below. Be sure to install the washers and Split washers in the correct order to ensure proper installation. This pertains to both the left and right sides of the bracket. *(See Figure Below)*

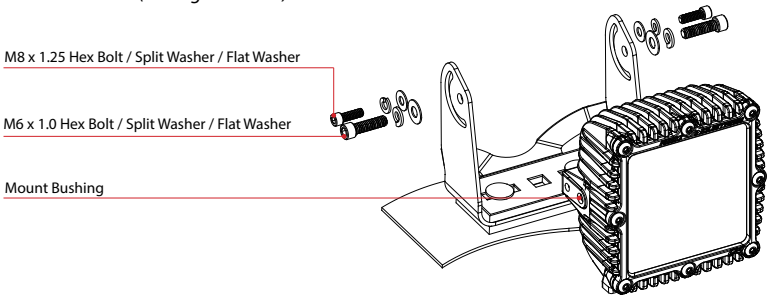

WIRING INSTRUCTIONS

IMPORTANT

Always disconnect the vehicle batter terminals before servicing the electrical system



1. When routing wire harness through any metal surface be sure it is free of any sharp edges and protected using wire sheathing or a grommet.

2. Route the harness through vehicle, connect the SAE lamps by directly plugging into the Deutsch connector's that are pre-terminated onto the harness.

3. Route the switch lead of the harness to the desired switch location and follow the wiring diagram to ensure proper connections at the switch.

4. Connect the positive and negative battery terminals once all connections have been made with the RED harness lead connected to the positive battery terminal and the BLACK wire to the negative battery terminal.

5. Test to verify functionality, be sure to properly aim your new SAE lighting before final torque on all mounting hardware.

6. If connecting to an existing switch be aware of the current rating of your selected switch, if switch rating is less than the amperage required to power your lighting then a relay must be added in line to prevent failure of the switch.

7. If connecting to existing wiring, make sure to use appropriate fusing and wire gauge. Be sure to use heat shrink tubing on all connections to ensure a weather tight seal.

RELAY HARNESS

NOTE: GOLD Spade is the Top of Switch, 3/4" mounting hole required

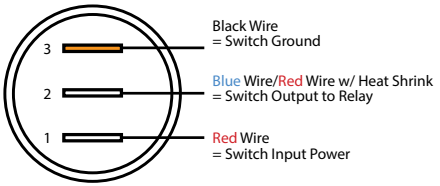

Wiring: Wire your lights according to the instructions included with the light. Take care to avoid any heat sources and sharp or abrasive surfaces.

For warranty information, visit www.rigidindustries.com/about/warranty

D-Series, D-XL, Q-Series and Rigid Industries are registered and/or common law marks owned by JST Performance, LLC, a Delaware limited liability company d/b/a Rigid Industries.

11-12671-A

trailfortress.com/rigid-industries-d-series-pro-sae-fog-white-pair-504815