RIGID Industries 46724 Installation Instructions

46724

Part number: 46724

trailfortress.com/rigid-industries-2021-bronco-roof-line-light-kit-with-a-sr-spot-flood-combo-bar-included-46724

Scan for fitment, price and install help

SR-SERIES®

SR-SERIES®
INSTALLATION INSTRUCTIONS



KIT INCLUDES

- (2) ¼" Hex Head Bolt
- (2) ¼" Nylon Insert Lock Nut
- (2) ¼" Flat Washer
- (2) Short Mounting Bracket
- (2) Tall Mounting Bracket
- (2) Compression Spacers
- (1) Light Bar
- (1) Wire Harness with 2 Position Switch

IMPORTANT

Thank you for purchasing Rigid Industries' products. Installation is fairly simple with the right tools and good mechanical abilities. If you are not confident in your mechanical skills, please seek the help of a professional to perform the installation. Please read through all of these instructions and tips before proceeding with the installation. **It is strongly recommended that this product be installed by a professional.**

trailfortress.com/rigid-industries-2021-bronco-roof-line-light-kit-with-a-sr-spot-flood-combo-bar-included-46724

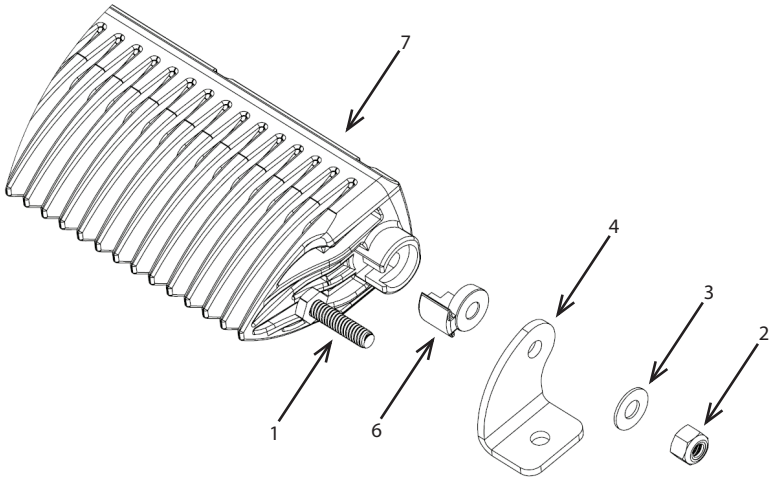

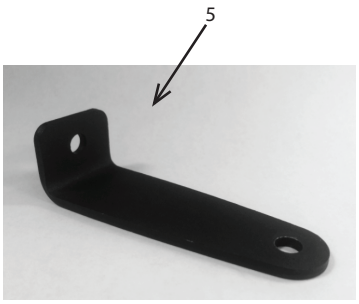

*** Install the Tall Mounting Bracket (5) in place of the Short Mounting Bracket (4) if a taller mounting position is desired***

Item	Description	Qty Single
1	¼" Hex Head Bolt	2
2	¼" Nylon Insert Lock Nut	2
3	¼" Flat Washer	2
4	Short Mounting Bracket	2
5	Tall Mounting Bracket	2
6	Compression Spacers	2
7	Light Bar	1
8	Wire Harness with 2 Position Switch	1

trailfortress.com/rigid-industries-2021-bronco-roof-line-light-kit-with-a-sr-spot-flood-combo-bar-included-46724

Always disconnect any power sources connected to your vehicle before servicing fuses or electrical systems.

STEP 1

The SR Series® light bar includes bolts that slide into each side of the light before compression spacers and brackets are attached for mounting. Insert mounting brackets onto the light as shown in Figure 1. Secure hardware and mount light onto desired location.

Figure 1:

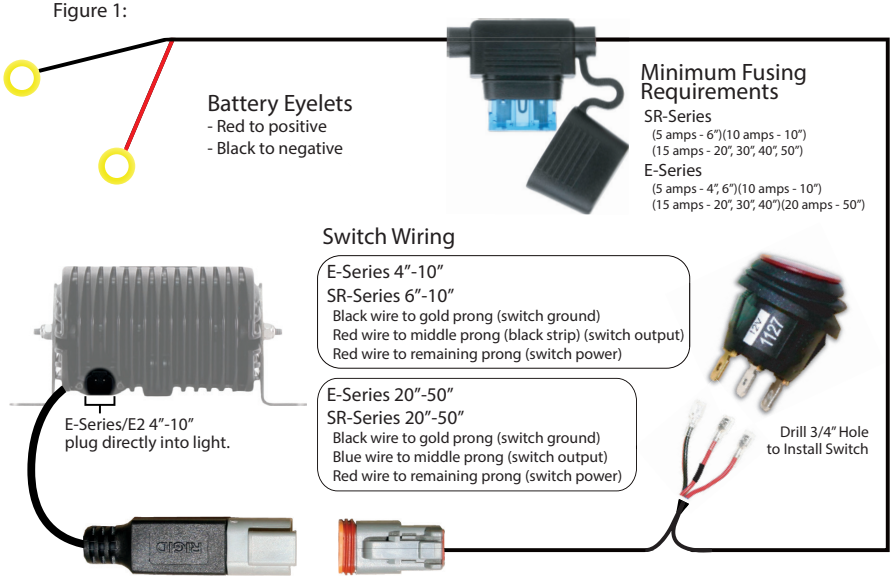

STEP 2

Attach the eyelet at the end of the red wire to the positive terminal of your battery or to any 12V DC source. Secure the black wire to the negative battery terminal or any suitable ground as shown in Figure 2. Route the wire harness to the desired switch secure with zip ties. Take care to avoid any heat sources and sharp or abrasive surfaces. When installing Rigid lights on a 24V DC system use a 24V relay. When installing multiple lights be sure to use adequate fusing.

STEP 3

Test lights to ensure proper function and secure mounting hardware according to desired light beam angle.

Your installation is now complete.

Welcome to the Rigid Nation!



WARRANTY INFORMATION

Rigid Industries warrants that this product will be free from defects in material and workmanship. If you believe your Rigid Industries product is defective, it must be returned to Rigid Industries for inspection by our warranty claims department. If, after inspection, Rigid Industries verifies that the defect was not caused by negligence, abuse, unauthorized repair or disassembly, Rigid Industries will determine whether the product will be repaired or replaced in accordance with Rigid Industries Limited Lifetime Warranty*.

Warranty Periods:

- All LED Lights – Limited Lifetime
- Flashlights – 1 year
- Accessories and Mounts – 2 years
- Batteries – 90 days

Warranty Coverage:

To begin your warranty claim, you must have a Return Merchandise Authorization (RMA) number. To get your RMA number, please contact our warranty department by phone at 480-655-0100 ext. 1008, or by filling out the Return Merchandise Authorization Form on our website.

All of the following will immediately void all warranties:
- Customer negligence – The customer has modified the light and/or is not using it for the recommend application.
- Customer abuse – Damage to the light beyond normal wear and tear.
- Repair work done by unauthorized personnel without Rigid Industries' approval.
- If the light has been opened or any screws have been removed.

All warranties are non-transferable. Warranty terms and policies are subject to change without notice.

*For all information regarding the Rigid Industries' Limited Lifetime Warranty please call 855-760-5337 ext. 1008, email warranty@RigidIndustries.com, or visit our warranty page online at rigidindustries.com/about/warranty.

Follow us on facebook at

Facebook.com/RigidIndustries

779 N Colorado St, Gilbert, AZ 85233 • 855-760-5337 ext 1008 • www.rigidindustries.com

PKG-IS-134 REV1

SR-Series and Rigid Industries are registered and/or common law marks owned by JST Performance, Inc. d/b/a Rigid Industries.

trailfortress.com/rigid-industries-2021-bronco-roof-line-light-kit-with-a-sr-spot-flood-combo-bar-included-46724