RIGID Industries 46720 Installation Instructions

46720

Part number: 46720

trailfortress.com/rigid-industries-2019-dodge-ram-2500-3500-a-pillar-6-inch-360-series-led-light-kit-46720

Scan for fitment, price and install help

INSTALLATION INSTRUCTIONS

360 SERIES



PRODUCTS INCLUDE:

- (2) RIGID 360 Lights (4 or 6 inch)
- Mounting hardware

IMPORTANT

THANK YOU FOR PURCHASING RIGID INDUSTRIES' PRODUCTS FOR YOUR VEHICLE.

Please read through all of these Instructions and tips before proceeding with the installation. We do our best to provide a simple installation process for all applications however a professional installation is always recommended.

Always disconnect any power sources connected to your vehicle before servicing fuses or electrical systems.

WIRING LEADS



RED WIRE = PROJECTING TRIGGER

BLACK WIRE = GROUND

WHITE WIRE = BACK-LIGHTING TRIGGER

trailfortress.com/rigid-industries-2019-dodge-ram-2500-3500-a-pillar-6-inch-360-series-led-light-kit-46720

INSTALLATION INSTRUCTIONS

4" 360-SERIES ASSEMBLY DIAGRAM

A	M8x25mm Carriage Bolt	Place through bracket
B	M8 Flat Washer	Place on carriage bolt
C	M8 Lock Washer	Place on carriage bolt
D	M8 Nut	Tighten light to bracket
E	M6 Ny Lock Nut	Place in Heatsink
F	Mounting Bushing	Slide into Heatsink
G	6-32x.375" Socket Head	Tighten mount bushing to Heatsink
H	M6 Flat Washer	Place on item I prior to install
I	M6x22mm Socket Head	Tighten the bracket to the light (Torque 32in-lbs)

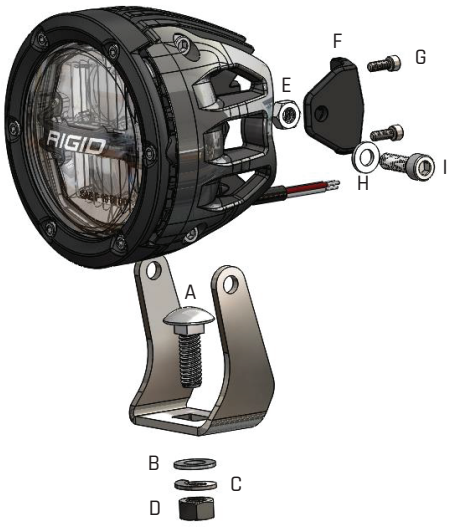

6" 360-SERIES ASSEMBLY DIAGRAM

A	M8x25mm Carriage Bolt	Place through bracket
B	M8 Flat Washer	Place on carriage bolt
C	M8 Lock Washer	Place on carriage bolt
D	M8 Nut	Tighten light to bracket
E	M6 Ny Lock Nut	Place in Heatsink
F	M4 Ny Lock Nut	Place into mounting bushing
G	Mounting Bushing	Slide into Heatsink
H	M6 Flat Washer	Place on J prior to install
I	M4 Flat Washer	Place on K prior to install
J	M6x22mm Socket Head	Tighten bracket to the light (Torque 32in-lbs)
K	M4x22m Socket Head	Tighten the bracket to the light (Torque 9in-lbs)



Wiring: Wire your lights according to the instructions included with the light. Take care to avoid any heat sources and sharp or abrasive surfaces.

Your installation is now complete.

Welcome to the Rigid Nation!

WARRANTY INFORMATION

For warranty information, visit www.rigidindustries.com/about/warranty 779 N Colorado St, Gilbert, AZ 85233 • 855-760-5337

www.rigidindustries.com

RIGID, 360-Series and Rigid Industries are registered and/or common law marks owned by JST Performance, LLC, a Delaware limited liability company d/b/a Rigid Industries.

11-13521-B

trailfortress.com/rigid-industries-2019-dodge-ram-2500-3500-a-pillar-6-inch-360-series-led-light-kit-46720