# RIGID Industries 36122 Installation Instructions

360-Series SAE Fog Light, Yellow/White, Pair

Part number: 36122

trailfortress.com/rigid-industries-360-series-sae-fog-yellow-white-pair-36122

Scan for fitment, price and install help

# INSTALLATION INSTRUCTIONS

## AMBER WHITE SAE FOG LIGHTS



**PRODUCTS INCLUDE:**

- (2) Amber White Lights (360 or D-Series)

- Mounting hardware




### IMPORTANT

THANK YOU FOR PURCHASING RIGID INDUSTRIES' PRODUCTS FOR YOUR VEHICLE.

Please read through all of these Instructions and tips before proceeding with the installation. We do our best to provide a simple installation process for all applications however a professional installation is always recommended.

Always disconnect any power sources connected to your vehicle before servicing fuses or electrical systems.

### WIRING LEADS



RED WIRE = WHITE PROJECTING TRIGGER

BLACK WIRE = GROUND

WHITE WIRE = AMBER PROJECTING TRIGGER

# INSTALLATION INSTRUCTIONS

## MOUNT INSTRUCTIONS & DIAGRAM FOR

## 360-SERIES

| | | |
|---|---|---|
| A | M8x25mm Carriage Bolt | Place through bracket |
| B | M8 Flat Washer | Place on carriage bolt |
| C | M8 Lock Washer | Place on carriage bolt |
| D | M8 Nut | Tighten light to bracket |
| E | M6 Ny Lock Nut | Place in Heatsink |
| F | Mounting Bushing | Slide into Heatsink |
| G | 6-32x.375" Socket Head | Tighten mount bushing to Heatsink |
| H | M6 Flat Washer | Place on item I prior to install |
| I | M6x22mm Socket Head | Tighten the bracket to the light (Torque 32in-lbs) |

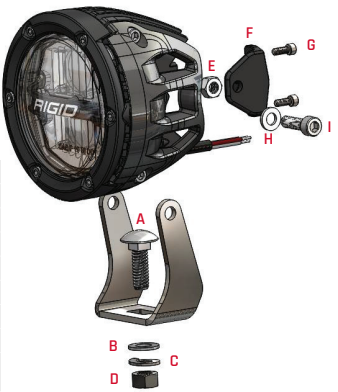


## D-SERIES

| | | |
|---|---|---|
| A | LED Light (Housing) | Place through bracket |
| B | M6 Allen Socket Head (2) | Place through light and bracket |
| C | M6 Nyloc Nut (2) | Tighten to M6 Allen bolt |
| *D | Mounting Bracket | Place into light housing |
| E | 5/16"- 18 Carriage Bolt | Place through bracket (bottom) |
| F | 5/16" Carriage Washer | Place on carriage bolt (first) |
| G | 5/16" Carriage Lock Washer | Place on carriage bolt (second) |
| H | 5/16"- 18 Carriage Nut | Tighten to 5/16"-18 carriage bolt |

* Bracket can be reversed for additional mounting configurations

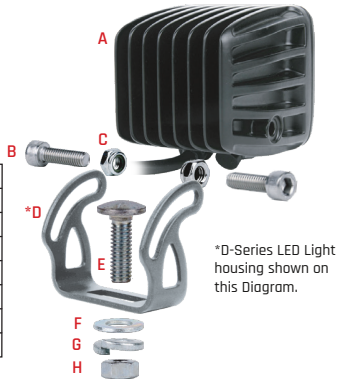


*D-Series LED Light housing shown on this Diagram.

Wiring: Wire your lights according to the instructions included with the light. Take care to avoid any heat sources and sharp or abrasive surfaces.

Your installation is now complete.
Welcome to the Rigid Nation!

### WARRANTY INFORMATION

For warranty information, visit www.rigidindustries.com/about/warranty 779 N Colorado St, Gilbert, AZ 85233 • 855-760-5337
www.rigidindustries.com

RIGID, 360-Series, D-Series and Rigid Industries are registered and/or common law marks owned by JST Performance, LLC, a Delaware limited liability company d/b/a Rigid Industries.

11-14014-A

trailfortress.com/rigid-industries-360-series-sae-fog-yellow-white-pair-36122