RIGID Industries 320053 Installation Instructions

Radiance+ Curved 20 Inch RGBW Light Bar

Part number: 320053

trailfortress.com/rigid-industries-radiance-curved-20-inch-rgbw-light-bar-320053

Scan for fitment, price and install help

INSTALLATION INSTRUCTIONS

RADIANCE+ RGBW SERIES



*THESE INSTRUCTIONS ARE FOR THE FOLLOWING LIGHTS:
RADIANCE+ RGBW SERIES PART NUMBERS

202053	210053	320053
682053	220053	330053
682153	230053	340053
322053	240053	350053
	250053	

THANK YOU FOR PURCHASING RIGID INDUSTRIES' PRODUCTS FOR YOUR VEHICLE.

Please read through all of these Instructions and tips before proceeding with the installation. We do our best to provide a simple installation process for all applications, however a professional installation is always recommended.

IMPORTANT

Always disconnect any power sources connected to your vehicle before servicing fuses or electrical systems.

NOTE:

1. Radiance lights are designed to operate from 9V-16V only. Using this product on a 24V or higher system will cause permanent damage to electrical components.

2. Backlighting and forward projecting LED's are intended for off-road use only.

trailfortress.com/rigid-industries-radiance-curved-20-inch-rgbw-light-bar-320053

INSTALLATION INSTRUCTIONS

FUNCTIONALITY:

The Radiance+ RGBW Series utilizes switch logic to change backlight colors. To choose from one of the 8 available backlight color options:

- Switch backlight on-off-on-off within less than 1 second
- Continue switching off and on until desired color is selected
- Once desired color is selected, keep back light on for more than 1 second to save color - backlight color is locked in until process is repeated

NOTE: The Radiance+ RGBW lights contain a syncing function. Lights wired on the same circuit will sync together when color selection switch logic is initiated.

Order of backlight options:

- Red
- Green
- Blue
- Purple
- White
- Amber
- Light blue
- Rotating color mode

MOUNTING INSTALLATION INSTRUCTIONS:

1. Insert mounting brackets onto light as shown below.

2. Secure hardware to a snug position and mount your light in desired location.

Pod and Scene SM

A M6 Nylock Nut
B M6-1x20 Socket Head
C Mounting Bracket Bolt
D 5/16-18x1 Carriage Bolt
E 5/16 Flat Washer
F 5/16 Lock Washer
G 5/16-18 Nut

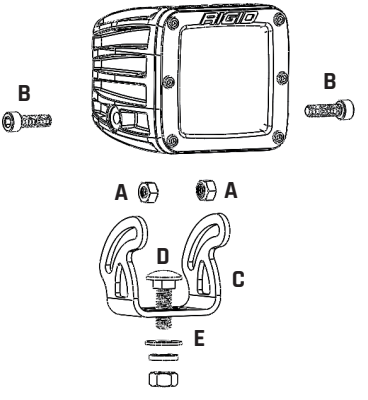

trailfortress.com/rigid-industries-radiance-curved-20-inch-rgbw-light-bar-320053

INSTALLATION INSTRUCTIONS

MOUNTING INSTALLATION INSTRUCTIONS:

1. Insert mounting brackets onto light as shown below.

2. Secure hardware to a snug position and mount your light in desired location.

DXL

A – 1/4-20 Socket Head Cap Screw
B – 10-24 Socket Head Cap Screw
C – 1/4" Flat Washer (2)
D – #10 Flat Washer (2)
E – Mount Bushing (2)
F – 1/4-20 Nylock Nut
G – 10-24 Nylock Nut
H – Mount Bracket
I – 3/8" Carriage Bolt
J – 3/8" Flat Washer
K – 3/8" Split Washer
L – 3/8" Hex Nut

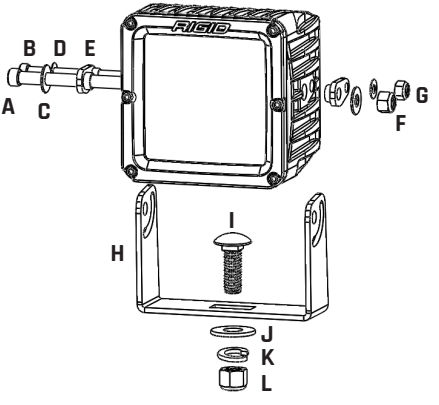

Light Bar

A – 1/4" Nylon Locknuts (2)
B – Mounting Bracket (2)
C – Mount Bushing (2)
D – 1/4 - 20x3/4" Hex Head Bolt (2)
E – 1/4" Flat Washer (2)

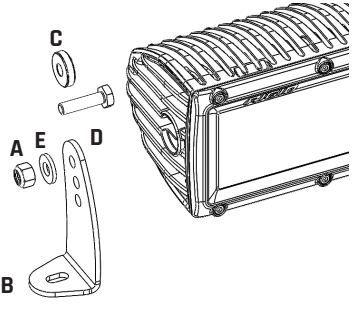

RDS Light Bar

A – 1/4" Nylon Locknuts (4)
B – Mounting Bracket (2)
C – Mount Bushing (2)
D – 1/4 - 20x3/4" Hex Head Bolt (4)
E – 1/4" Flat Washer (2)

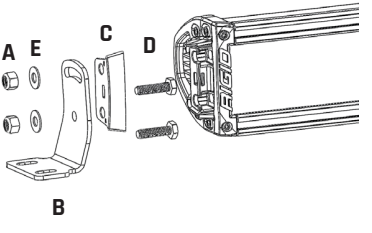

trailfortress.com/rigid-industries-radiance-curved-20-inch-rgbw-light-bar-320053

INSTALLATION INSTRUCTIONS

WIRING HARNESS INSTALLATION INSTRUCTIONS:

1. Always disconnect the negative battery terminal when working with any electrical circuits.

2. When routing wires through any metal or abrasive surfaces, be sure the surface is free of any sharp edges.

3. Match the light pigtail to the harness colors: Red to Red (Forward projecting LED +12v trigger), White to White (back-lighting LED +12v trigger), and Black to Black (shared ground) using butt connectors



4. Find a desired location for switches and drill a 3/4" hole for each switch.

5. Connect leads from wire harness to switch using the following diagrams.

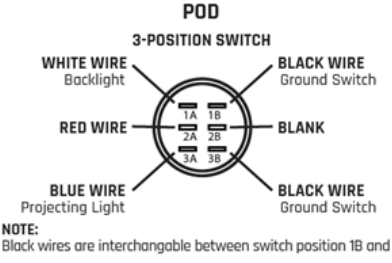

NOTE:
Black wires are interchangable between switch position 1B and 3B

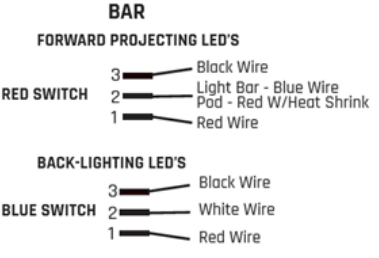

6. Route main power and ground leads from the harness to the battery terminals and attach the RED lead to battery +12v and the BLACK lead directly to the battery ground.

7. Re-connect the negative battery terminal and test switches to verify functionality.

Your installation is now complete.
Welcome to the Rigid Nation!

For warranty information, visit www.rigidindustries.com/about/warranty
779 N Colorado St, Gilbert, AZ 85233 • 855-760-5337 www.rigidindustries.com
RIGID and Rigid Industries are registered and/or common law marks owned by JST Performance, LLC, a Delaware limited liability company d/b/a Rigid Industries.

11-14369-A

trailfortress.com/rigid-industries-radiance-curved-20-inch-rgbw-light-bar-320053