RIGID Industries 244293 Installation Instructions

Q-Series Spot with Amber PRO Lens

Part number: 244293

trailfortress.com/rigid-industries-q-series-spot-with-amber-pro-lens-244293

Scan for fitment, price and install help

RIGID INDUSTRIES LED LIGHTING®

Q-SERIES

Q-SERIES/Q2

MOUNTING INSTRUCTIONS



Thank you for purchasing the Rigid Industries Q-Series.
Installation is fairly simple with the right tools and good mechanical abilities. If you are not confident in your mechanical skills, please seek the help of a professional to perform the installation. Please read through all of these instructions and tips before proceeding with installation.

Always disconnect battery before servicing any fuses or electrical system.

trailfortress.com/rigid-industries-q-series-spot-with-amber-pro-lens-244293

PARTS INCLUDED

Item	Description	Qty
1	Bracket	1
2	Rubber Shock Isolation Mount	2
3	Mount Bushing	2
4	1/2"-13 UNC X 1.5" Carriage Bolt	1
5	1/2" Flat Washer	1
6	1/2" Split Washer	1
7	1/2"-13 UNC Hex Nut	1
8	3/8"-16 UNC X 1.5" Carriage Bolt	2
9	3/8" Flat Washer	2
10	3/8" Split Washer	2
11	3/8"-16 UNC Hex Nut	2
12	M8x1.25 X 30mm Socket Cap Screw	2
13	M8 Flat Washer	2
14	M8 Split Lock Washer	2
15	M8x1.25 Hex Nut	2
16	M6x1.0 X 22mm Socket Cap Screw	2
17	M6 Flat Washer	2
18	M6 Split Lock Washer	2
19	M6 Square Nut	2

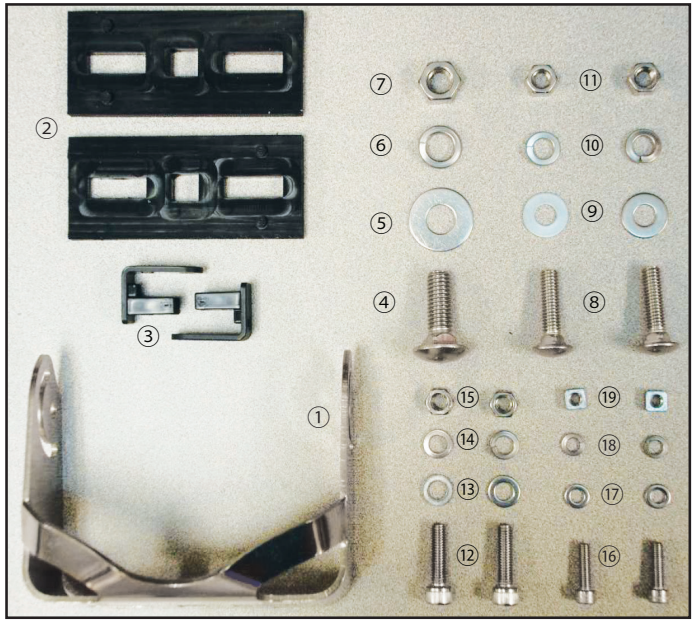

CAUTION

To ensure proper function of the supplied mounting kit, please use the correct torque settings of all mounting screws.

Screw Thread	Max Torque (in•lbs)
1/2"-13 UNC	465
3/8"-16 UNC	212
M8	195
M6	80

STEP 1

The illustration below demonstrates how the buts will be held in place by the Mount Bushings. This pertains to both the left and right sides.

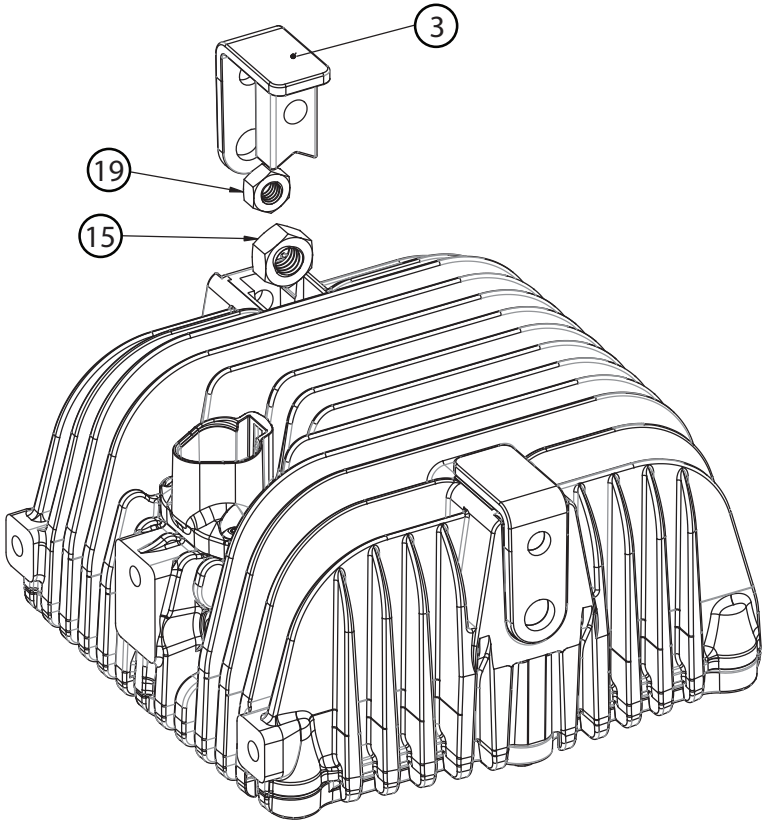

STEP 2

You will need to choose if you would like to mount your light in a stationary position or with one larger bolt, giving you the ability to swivel the light.

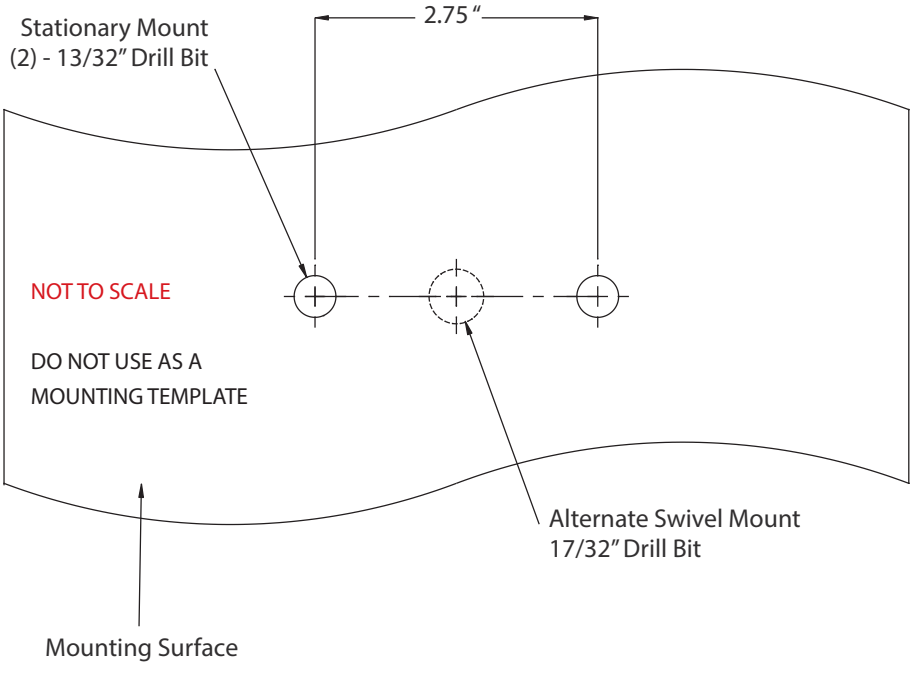

CAUTION

To ensure proper function of the supplied mounting kit, please use the correct torque settings of all mounting screws.

Screw Thread	Max Torque (in•lbs)
1/2"-13 UNC	465
3/8"-16 UNC	212
M8	195
M6	80

trailfortress.com/rigid-industries-q-series-spot-with-amber-pro-lens-244293

STATIONARY MOUNT

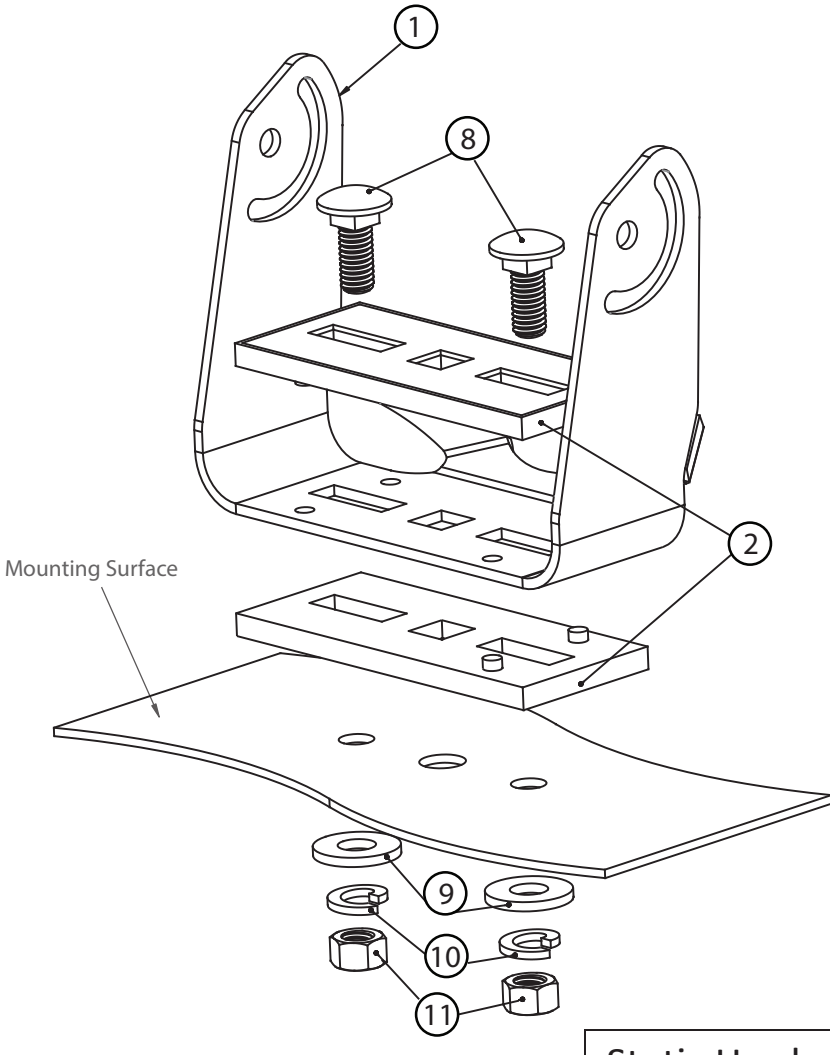

Static Hardware	
Item	QTY
1	1
2	2
8	2
9	2
10	2
11	2

SWIVEL MOUNT

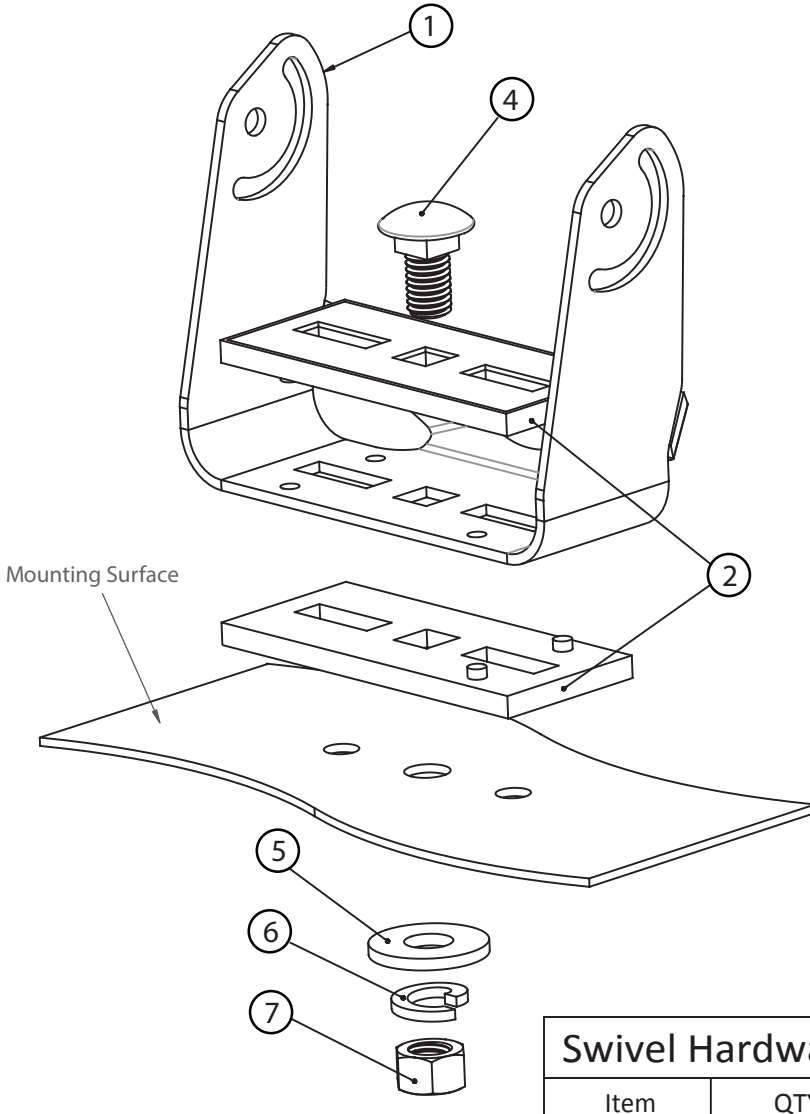

Swivel Hardware	
Item	QTY
1	1
2	2
4	1
5	1
6	1
7	1

STEP 3

Secure light to mounting bracket by following the diagram below. Be sure to install the washers and lock washers in the correct order to ensure proper installation.

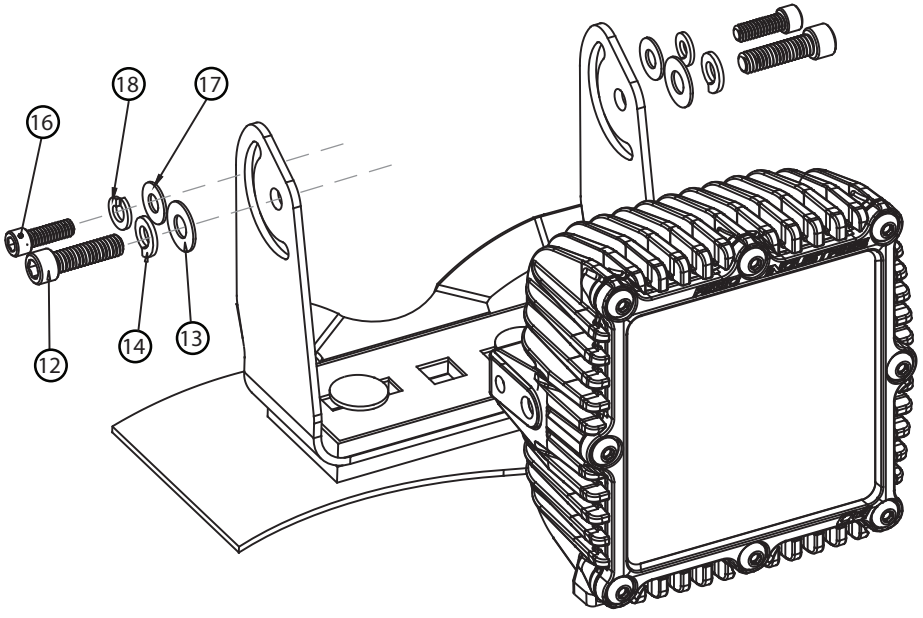

Hardware	
Item	QTY
12	2
13	2
14	2
16	2
17	2
18	2

WIRING INSTRUCTIONS

1. Attach red terminal eyelet to battery positive or any 12V DC source. Secure black wire to suitable ground or battery negative. Route wires to your desired switch, mounting locations, and to your light. Taking care to avoid surfaces that are rough, sharp, or hot. Secure harness with zip ties.

2. When installing Rigid lights on a 24V DC system be sure to use a 24V relay. When installing multiple lights be sure to have adequate fusing.

3. Plug the Deutsch connector into the back of your light.

4. Test your light to ensure proper function and then secure mounting hardware according to your desired light beam angle.

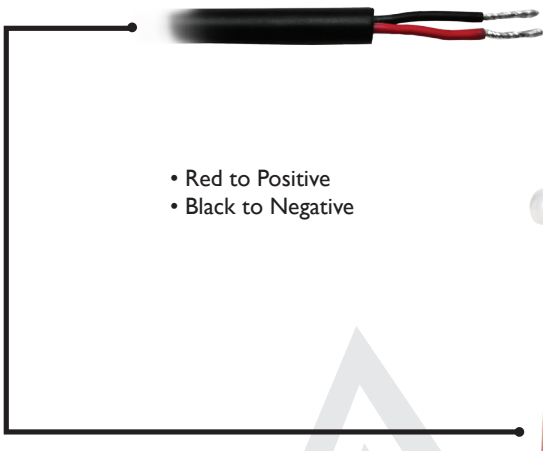

- Red to Positive
- Black to Negative



Your installation is now complete.

Welcome to the Rigid Nation!

FOLLOW US ON FACEBOOK AT

facebook.com/RigidIndustries

779 N Colorado St, Gilbert, AZ 85233 • (855) 760 5337 • www.RigidIndustries.com

12/2013 - Part # IS-Q

FIND OUT MORE INFO

RIGIDINDUSTRIES.COM

trailfortress.com/rigid-industries-q-series-spot-with-amber-pro-lens-244293