TRAIL FORTRESS

BUILT FOR THE TRAIL. CHECKED FOR YOUR TRUCK.

K&N 81-0807 Installation Instructions

Oil Catch Can for Chevrolet Camaro LT1 (2016-2024)

Part number: 81-0807

trailfortress.com/k-n-oil-catch-can-81-0807

Scan for fitment, price and install help

Oil Separator
INSTALLATION INSTRUCTIONS

81-0807
CHEVROLET
2016-23 Camaro 6.2L

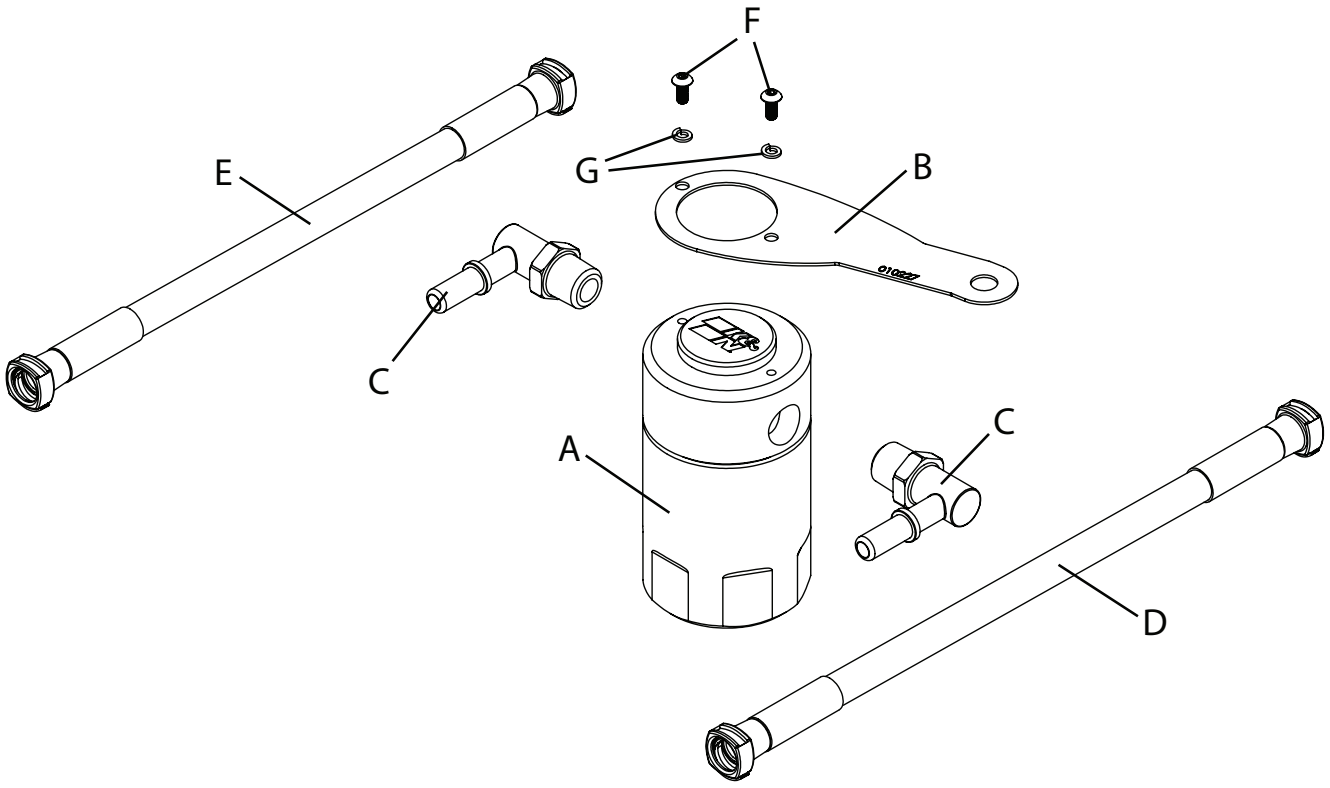

PARTS LIST:

	Description	Qty.	Part #
A	CATCH CAN; 2.5”OD X 4.5”H	1	85-6860
B	BRACKET	1	010227
C	QUICK RELEASE; 3/8” NPT	2	082339
D	HOSE; 3/8”ID X 18.5”L	1	084153
E	HOSE; 3/8”ID X 17.5”L	1	084154
F	8-32 X 3/8; BTNHD HEX	2	91255A192
G	18-8 SPLIT LOCK WASHER	2	92146A618

TOOLS NEEDED:

2.5mm Allen key
13mm Socket
Ratchet
13/16”