TRAIL FORTRESS

BUILT FOR THE TRAIL. CHECKED FOR YOUR TRUCK.

K&N 81-0804 Installation Instructions

Oil Catch Can for Silverado 1500, Tahoe & Escalade

Part number: 81-0804

trailfortress.com/k-n-oil-catch-can-81-0804

Scan for fitment, price and install help

Oil Separator
INSTALLATION INSTRUCTIONS

81-0804
CHEVROLET / GMC
2019-23 Silverado 5.3L / 6.2L
2019-23 Tahoe 5.3L / 6.2L
2019-23 Surburban 5.3L / 6.2L
2019-23 Sierra 5.3L / 6.2L
2019-23 Yukon / Yukon XL 5.3L / 6.2L

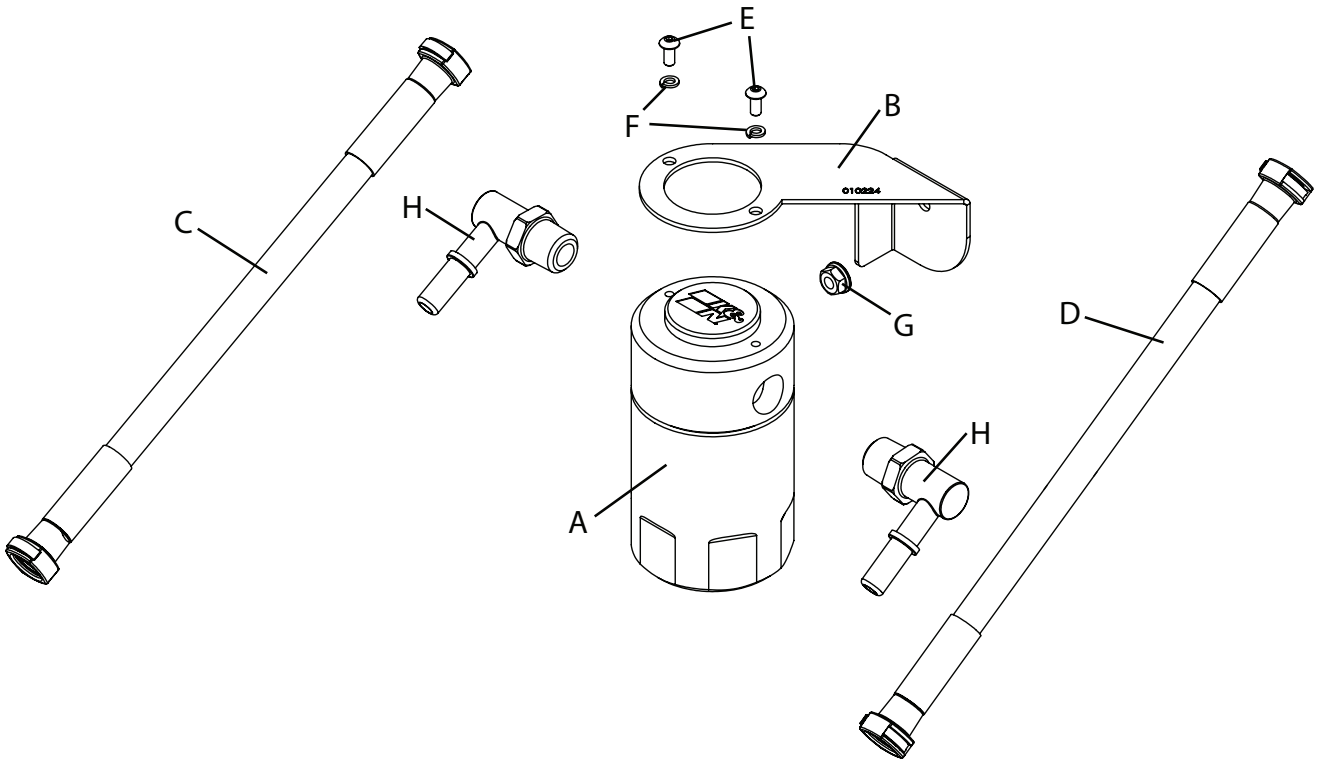

PARTS LIST:

	Description	Qty.	Part #
A	CATCH CAN; 2.5”OD X 4.5”H	1	85-6860
B	BRACKET	1	010224
C	HOSE; 3/8”ID X 9”L	1	084149
D	HOSE; 3/8”ID X 16”L	1	084152
E	8-32 X 3/8; BTNHD HEX	2	91255A192
F	18-8 SPLIT LOCK WASHER	2	92146A618
G	NUT; M6 HEX SERRATED	1	AEM-444.460.04
H	QUICK RELEASE; 3/8” NPT	1	08239

TOOLS NEEDED:

2.5mm Allen key
10mm Socket
Ratchet
Extension
13/16” Wrench