TRAIL FORTRESS

BUILT FOR THE TRAIL. CHECKED FOR YOUR TRUCK.

K&N 77-6019KC Installation Instructions

Metal Intake for Nissan Pathfinder (2022-2025)

Part number: 77-6019KC

trailfortress.com/k-n-performance-air-intake-system-77-6019kc

Scan for fitment, price and install help

77 Series
METAL INTAKE SYSTEMS
FOR TRUCKS & SUVs

INSTALLATION INSTRUCTIONS

Not legal for sale or use in California on any pollution controlled motor vehicle.

77-6019KC
NISSAN
2022-25 PATHFINDER
V6-3.5L

TOOLS NEEDED:

Ratchet
Extension
10mm Socket
Flat Blade Screw Driver
Phillips Screw Driver

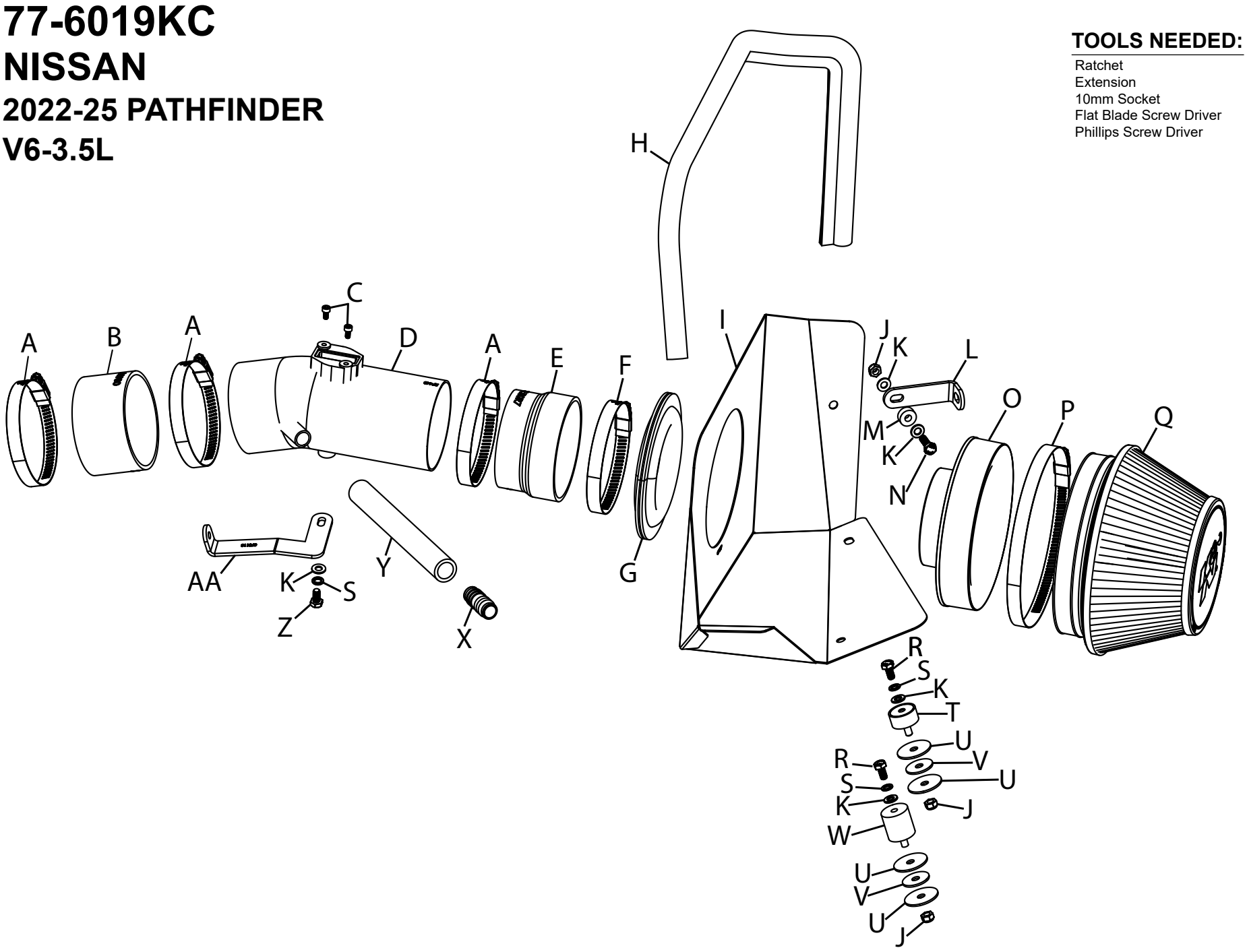

PARTS LIST:

	Description	Qty.	Part #		Description	Qty.	Part #		Description	Qty.	Part #
A	HOSE CLAMP; #52	3	08610	J	NUT; 6MM NYLOCK, HEXHD	3	07512	S	WASHER; 1/4”ID X 5/8”OD	3	08275
B	HOSE; 3.25”ID X 2”L	1	08690	K	WASHER; 1/4” LOCK	5	08198	T	STUD; RUBBER, 1/2”L X 1”W	1	070228
C	BOLT; M4-.7 X 8MM, ALNHD	2	07733	L	BRACKET; “L”	1	07805A	U	WASHER; 1.25”OD X .28 HOLE	4	08151
D	TUBE; 3.25”OD X 7.75”L, AL	1	27443C	M	SPACER; .625”OD X .250”ID	1	06555	V	WASHER; 1” X .300 X .063	2	21685
E	HOSE; 3.25”ID TO 3.5”ID X 2.25	1	084091	N	BOLT; M6 X 1 X 20MM, HEX	1	07795	W	STUD; RUBBER, M6 X 1	1	02033
F	HOSE CLAMP; #56	1	08620	O	ADAPTER; UNIVERSAL	1	21512-1	X	FITTING; VENT, 5/8”OD	1	08048
G	EDGE TRIM; (20”L)	1	102494	P	HOSE CLAMP; #104	1	08697	Y	HOSE; 5/8”ID X 7.5”L	1	084008
H	EDGE TRIM; (44”L)	1	102486	Q	AIR FILTER	1	RU-1009	Z	BOLT; M6 X 1 X 12MM, HEXHD	1	07727
I	HEAT SHIELD	1	074567	R	BOLT; M6-1 X 16MM, HEX	2	07812	AA	BRACKET; “L”	1	070113

If you need any assistance please call 1-800-858-3333 to speak with a representative in our Customer Service Center before returning the product.

NOTE: FAILURE TO FOLLOW INSTALLATION INSTRUCTIONS AND NOT USING THE PROVIDED HARDWARE MAY DAMAGE THE INTAKE TUBE, THROTTLE BODY AND ENGINE.

TO START:

1. Turn off the ignition and disconnect the negative battery cable.
NOTE: Disconnecting the negative battery cable erases pre-programmed electronic memories. Write down all memory settings before disconnecting the negative battery cable. Some radios will require an anti-theft code to be entered after the battery is reconnected. The anti-theft code is typically supplied with your owner’s manual. In the event your vehicles anti-theft code cannot be recovered, contact an authorized dealership to obtain your vehicles anti-theft code.



2. Remove the two bolts that secure the fresh air duct to the core support and then remove the duct from the vehicle.



3. Release the two clips that secure the upper air filter housing.