TRAIL FORTRESS

BUILT FOR THE TRAIL. CHECKED FOR YOUR TRUCK.

K&N 77-3082KP Installation Instructions

77 Series Metal Intake for Silverado & Escalade

Part number: 77-3082KP

trailfortress.com/k-n-performance-air-intake-system-77-3082kp

Scan for fitment, price and install help

INTAKE SYSTEMS FOR VEHICLES LISTED ARE 50 STATE LEGAL. SEE KNFILTERS.COM FOR CARB STATUS ON EACH PART FOR A SPECIFIC VEHICLE.

INSTALLATION INSTRUCTIONS

77-3082KP
CHEVROLET / GMC / CADILLAC
2014-15 Silverado 1500 / Sierra 1500
2015 Tahoe / Suburban / Yukon / Escalade ESV
V8-5.3L / 6.2L

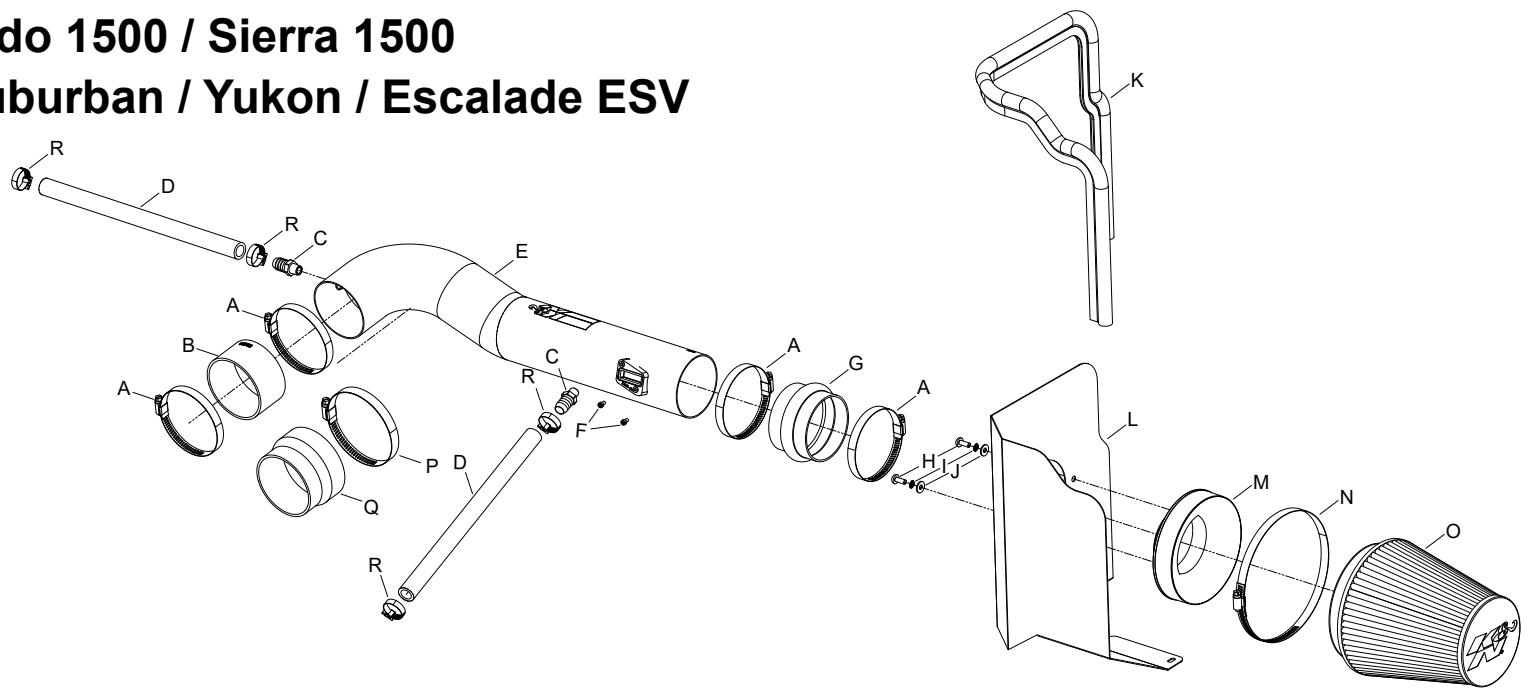

NOTE: This kit was not designed to fit vehicles with a body lift.

TOOLS NEEDED:

ratchet
extension
10mm socket
flat blade screw driver
T10 TORX
4mm allen key
3mm allen key
¾" wrench

PARTS LIST:

	Description	Qty.	Part #		Description	Qty.	Part #		Description	Qty.	Part #
A	HOSE CLAMP #56	4	08620	G	HOSE; HUMP 3.5"ID X 2.5"L	1	08699	M	ADAPTER; UNIVERSAL, 6"	1	21512-1
B	HOSE; 3.5" ID X 2"L	1	08698	H	BOLT; M6 X 1 X 16MM	2	07730	N	HOSE CLAMP #104	1	08697
C	VENT; STRT, 5/8 BARBED NPT	2	08911-2	I	WASHER; M6 SPLIT LOCK ZINC	2	1-3025	O	AIR FILTER	1	RU-1041
D	HOSE; 5/8"ID X 14"L	2	084083	J	WASHER; 6MM, FLAT	2	08269	P	HOSE CLAMP #64	1	08645
E	INTAKE TUBE; (AL)	1	27610KP	K	EDGE TRIM; 44"L	1	102486A	Q	HOSE; 4"ID to 3.5"ID x 3"L	1	08497
F	BOLT; M4-.7 x 8 MM	2	07733	L	HEAT SHIELD	1	073155-1A	R	HOSE CLAMP; #10 MINI	4	08411

If you need any assistance please call 1-800-858-3333 to speak with a representative in our Customer Service Center before returning the product.

NOTE: FAILURE TO FOLLOW INSTALLATION INSTRUCTIONS AND NOT USING THE PROVIDED HARDWARE MAY DAMAGE THE INTAKE TUBE, THROTTLE BODY AND ENGINE.

TO START:

1. Turn off the ignition and disconnect the negative battery cable.
NOTE: Disconnecting the negative battery cable erases pre-programmed electronic memories. Write down all memory settings before disconnecting the negative battery cable. Some radios will require an anti-theft code to be entered after the battery is reconnected. The anti-theft code is typically supplied with your owner's manual. In the event your vehicles anti-theft code cannot be recovered, contact an authorized dealership to obtain your vehicles anti-theft code.

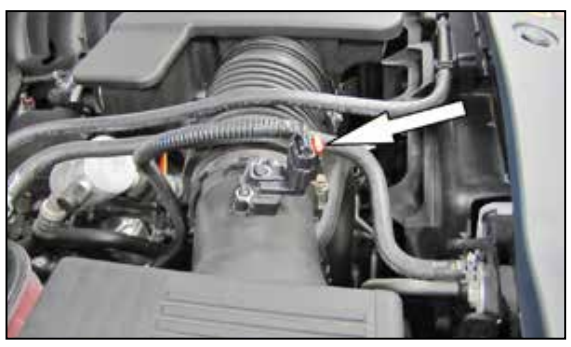

2. Disconnect the mass air sensor electrical connection.

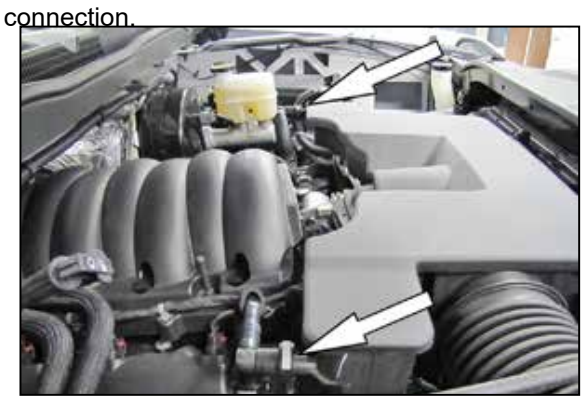

3. Disconnect the two crank case vent tubes from the intake plenum.



4. Loosen the two hose clamps securing the intake plenum to the factory air box and to the throttle body.



5. Remove the intake plenum from the vehicle.



6. Pull up the air box to release it from the mounting grommets and then remove the factory air box from the vehicle.
NOTE: It will be necessary to unhook the mass air sensor wiring harness from the air box as it is removed.
NOTE: K&N Engineering, Inc., recommends that customers do not discard factory air intake.

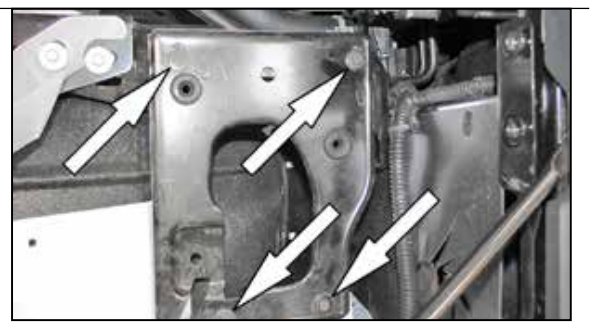

7. Remove the four bolts securing the air box mounting tray and then remove the tray from the vehicle. **NOTE: Three of the bolts will be reused in a latter step.**



8. Install the provided edge trim onto the heat shield as shown. **NOTE: Some trimming of the edge trim will be necessary.**



9. Install the heat shield assembly and secure to the air box mounting plate location using the three factory bolts from step #7.

trailfortress.com/k-n-performance-air-intake-system-77-3082kp