TRAIL FORTRESS

BUILT FOR THE TRAIL. CHECKED FOR YOUR TRUCK.

K&N 77-3076KTK Installation Instructions

Metal Intake for Silverado & Sierra HD (2011-2013)

Part number: 77-3076KTK

trailfortress.com/k-n-performance-air-intake-system-77-3076ktk

Scan for fitment, price and install help

INTAKE SYSTEMS FOR VEHICLES LISTED ARE 50 STATE LEGAL. SEE KNFILTERS.COM FOR CARB STATUS ON EACH PART FOR A SPECIFIC VEHICLE.

INSTALLATION INSTRUCTIONS

77-3076KTK
CHEVROLET / GMC
2011-2013 Silverado 2500HD / 3500HD
2011-2013 Sierra 2500HD / 3500HD
V8-6.0L

NOTE: This kit was not designed to fit vehicles with a body lift.

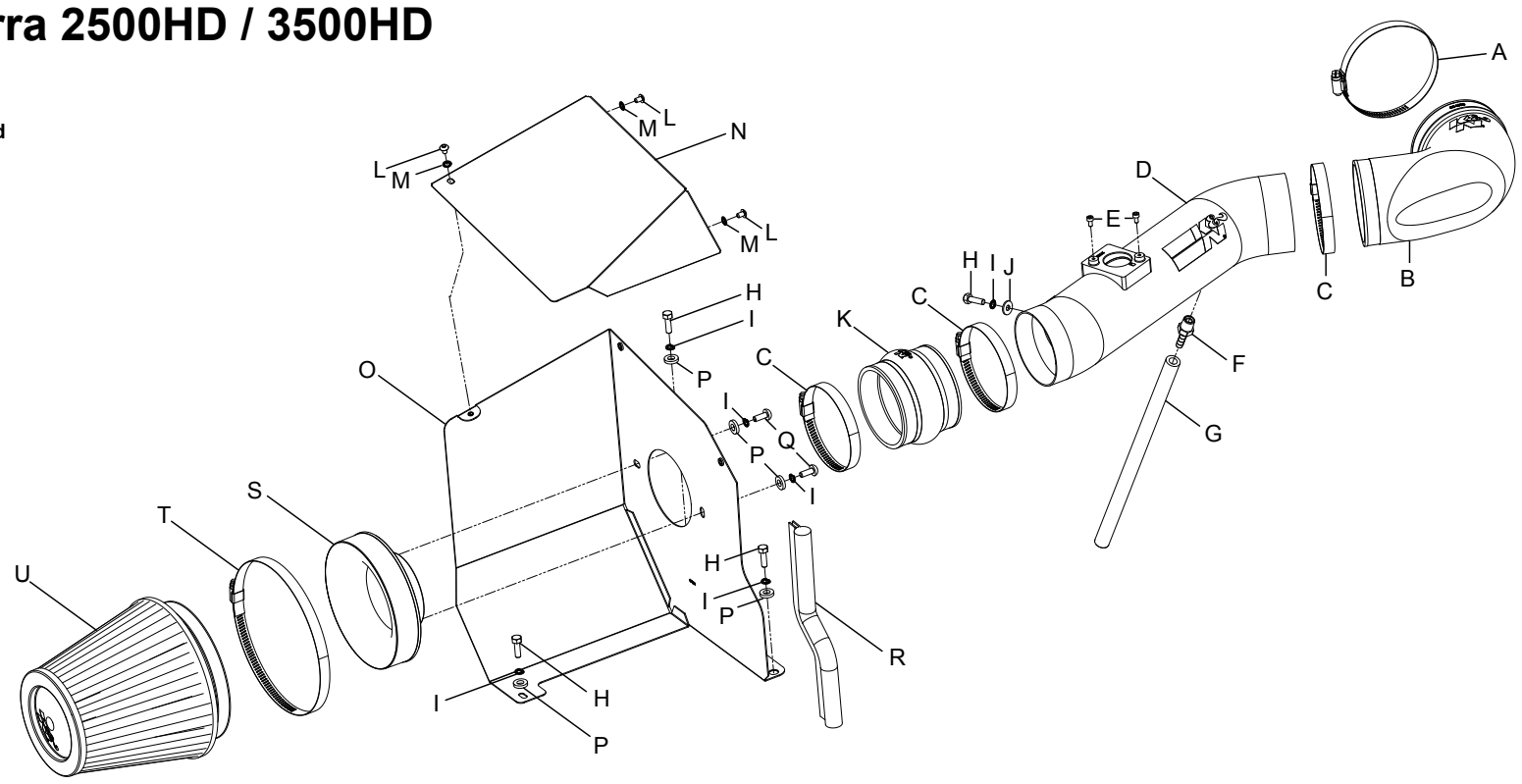

TOOLS NEEDED:
Ratchet
Extension
10mm socket
Flat blade screw driver
Phillips screw driver
t15 torx
9/16” wrench
4mm Allen
3mm allen

PARTS LIST:

	Description	Qty.	Part #		Description	Qty.	Part #		Description	Qty.	Part #
A	HOSE CLAMP #64 STAINLESS	1	08645	H	BOLT; M6 X 1.00” X 20MM HEX	4	07795	O	HEAT SHIELD	1	07384
B	HOSE; 4” TO 3-1/2”ID 106DEG	1	084053	I	WASHER; M6 SPLIT LOCK ZINC	6	1-3025	P	WASHER; 1/4”ID X 5/8” OD- SAE	5	08275
C	HOSE CLAMP #56	3	08620	J	WASHER; 6MM FLAT, SS	1	08269	Q	BOLT; M6 X 1.00 X 16MM, SS	2	07730
D	INTAKE TUBE	1	27572TK	K	HOSE; 3-1/2”ID X 3” L HUMP	1	084057	R	EDGE TRIM (11”)	1	102468
E	BOLT; M4-0.07 8MM, A/H CAP	2	07733	L	BOLT; M5 X .8 X 8MM, SS	3	07740	S	ADAPTER; UNIVERSAL, 6”	1	21512-1
F	VENT; STRT, 3/8” HOSE, 1/4”	1	08047	M	WASHER;5MM INTERNAL STAR	3	07724	T	HOSE CLAMP # 104	1	08697
G	HOSE 3/8” ID X 12”L	1	08412	N	HEAT SHIELD LID	1	074093	U	AIR FILTER	1	RF-1042XD

If you need any assistance please call 1-800-858-3333 to speak with a representative in our Customer Service Center before returning the product.

NOTE: FAILURE TO FOLLOW INSTALLATION INSTRUCTIONS AND NOT USING THE PROVIDED HARDWARE MAY DAMAGE THE INTAKE TUBE, THROTTLE BODY AND ENGINE.

TO START:

1. Turn off the ignition and disconnect the negative battery cable.
NOTE: Disconnecting the negative battery cable erases pre-programmed electronic memories. Write down all memory settings before disconnecting the negative battery cable. Some radios will require an anti-theft code to be entered after the battery is reconnected. The anti-theft code is typically supplied with your owner’s manual. In the event your vehicles’ anti-theft code cannot be recovered, contact an authorized dealership to obtain your vehicles anti-theft code.



2. Disconnect the mass air sensor and pressure sensor electrical connections shown.



3. Lift up and remove the engine cover as shown.

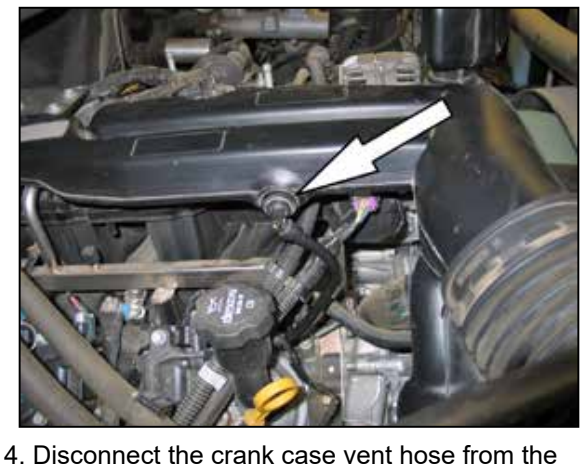

4. Disconnect the crank case vent hose from the intake tube plenum.



5. Loosen the hose clamp securing the intake tube to the throttle body.

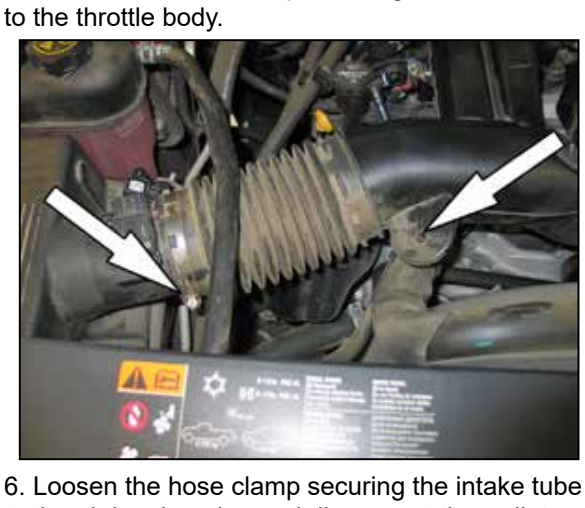

6. Loosen the hose clamp securing the intake tube to the air box housing and disconnect the radiator hose retaining clip from the intake tube. Then remove the intake tube from the vehicle.