TRAIL FORTRESS

BUILT FOR THE TRAIL. CHECKED FOR YOUR TRUCK.

K&N 77-3070KP Installation Instructions

Polished Metal Intake for GM Trucks (2009-2014)

Part number: 77-3070KP

trailfortress.com/k-n-performance-air-intake-system-77-3070kp

Scan for fitment, price and install help

INTAKE SYSTEMS FOR VEHICLES LISTED ARE 50 STATE LEGAL. SEE KNFILTERS.COM FOR CARB STATUS ON EACH PART FOR A SPECIFIC VEHICLE.

INSTALLATION INSTRUCTIONS

77-3070KP
CADILLAC / CHEVROLET / GMC
2009-14 Escalade ESV / EXT
V8-6.2L
2009-13 Avalanche
V8-5.3L / 6.0L
2009-13 Silverado 1500
V8-4.8L / 5.3L / 6.0L / 6.2L
2009-14 Suburban
V8-5.3L / 6.0L
2009-14 Tahoe
V8-4.8L / 5.3L / 6.2L
2009-14 Yukon, Denali / Denali XL / XL 1500
V8-4.8L / 5.3L / 6.2L
2009-13 Sierra, Denali 1500
V8-4.8L / 5.3L / 6.0L / 6.2L

NOTE: EXCLUDES HYBRID MODELS

NOTE: This kit was not designed to fit vehicles with a body lift.

TOOLS NEEDED:

Flat Blade Screwdriver
½" Socket
5/8" Drill Bit
5/8" Wrench
10mm Socket
Drill
Extension
Ratchet
T15 Torx

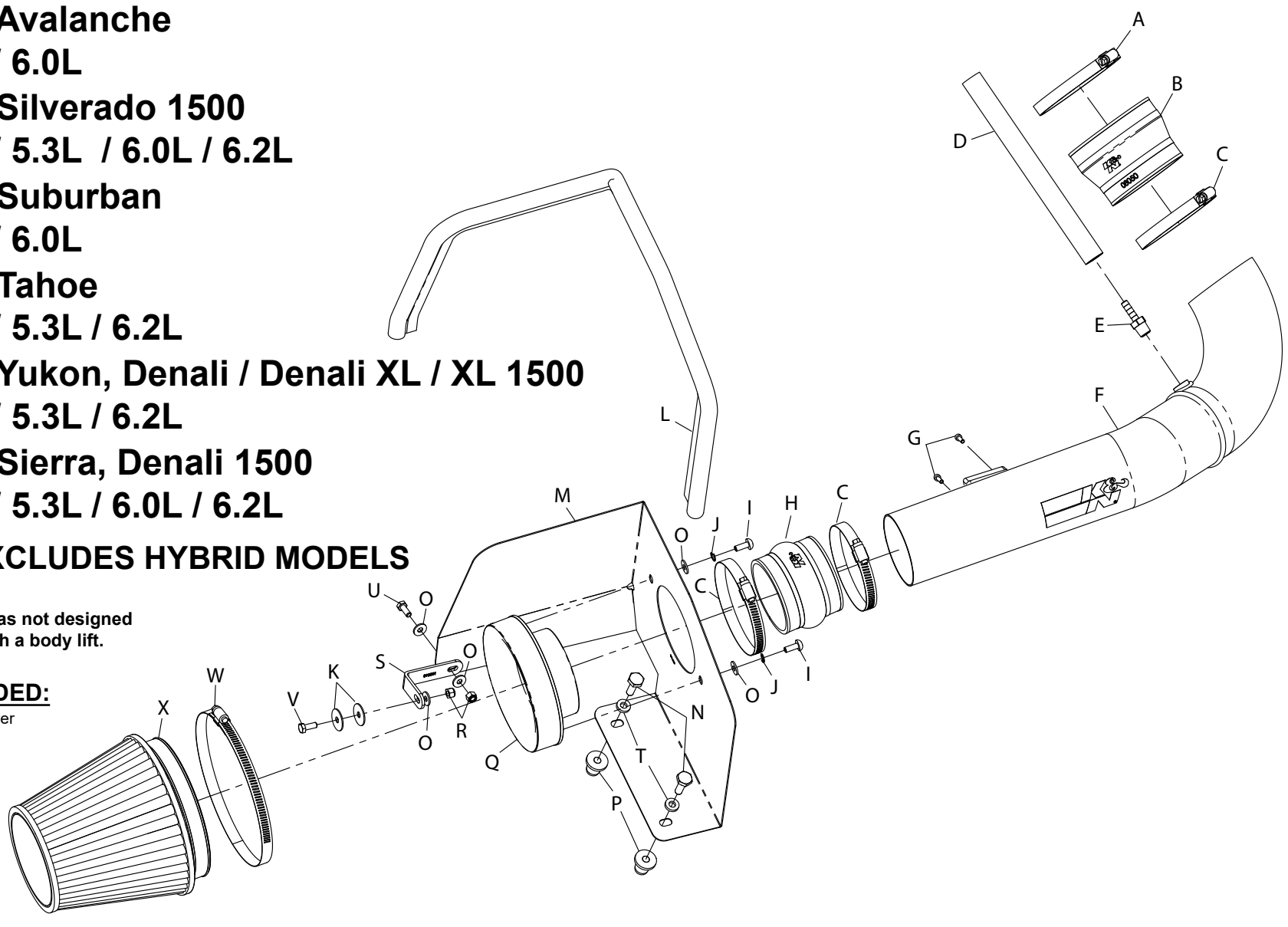

PARTS LIST:

	Description	Qty.	Part #								
A	Hose Clamp #64 Stainless	1	08645	I	Bolt; M6X1X16mm	2	07730	Q	Adaptor; #380	1	21512-1
B	Hose; 4" To 3.5" ID X 3" L TPRD	1	08050	J	Washer; 1/4" Lock, ZN	2	08198	R	Nut; 6mm Nylock	2	07512
C	Hose Clamp #56	3	08620	K	Washer; 1"D X 1/4 Hole Fender	2	08160	S	Bracket; "L" Small	1	010031A
D	Hose; 3/8" ID X 17" L	1	08404	L	Edge Trim (39")	1	102496A	T	Washer; 5/16"ID X 5/8"OD, Flat	2	08276
E	Vent; Strt., 3/8"Hose, 1/4"NPT	1	08047	M	Heat Shield	1	07635A	U	Bolt; M6-1.00 X 25mm	1	07858
F	Intake Tube (AL)	1	27457AKP	N	Bolt; 5/16"- 18 X 1"L	2	07777	V	Bolt; m6-1 X 16mm	1	07812
G	Bolt; M4x-.7 8mm	2	07733	O	Washer; 6mm Flat	5	08269	W	Hose Clamp #104	1	08697
H	Hose; 3.5"ID x 3" Hump	1	084057	P	Insert; 5/16-18 X .600 OD X .730L	2	088002	X	Air Filter	1	RU-1042

If you need any assistance please call 1-800-858-3333 to speak with a representative in our Customer Service Center before returning the product.

NOTE: FAILURE TO FOLLOW INSTALLATION INSTRUCTIONS AND NOT USING THE PROVIDED HARDWARE MAY DAMAGE THE INTAKE TUBE, THROTTLE BODY AND ENGINE.

TO START:

1. Turn off the ignition and disconnect the negative battery cable.
NOTE: Disconnecting the negative battery cable erases pre-programmed electronic memories. Write down all memory settings before disconnecting the negative battery cable. Some radios will require an anti-theft code to be entered after the battery is reconnected. The anti-theft code is typically supplied with your owner's manual. In the event your vehicles' anti-theft code cannot be recovered, contact an authorized dealership to obtain your vehicles anti-theft code.



2. Disconnect the mass air electrical connection.



3. Lift up on the engine cover and remove as shown.