TRAIL FORTRESS

BUILT FOR THE TRAIL. CHECKED FOR YOUR TRUCK.

K&N 77-2592KS Installation Instructions

Silver Metal Intake for Ford Edge (2015-2018)

Part number: 77-2592KS

trailfortress.com/k-n-performance-air-intake-system-77-2592ks

Scan for fitment, price and install help

NOT LEGAL FOR SALE OR USE ON ANY POLLUTION CONTROLLED MOTOR VEHICLE IN CALIFORNIA.

INSTALLATION INSTRUCTIONS

77-2592KS
FORD
2015-18 Edge
V6-3.5L

TOOLS NEEDED:

Flat blade screw driver
10mm wrench
14mm wrench
13mm wrench
Ratchet
Extension
10mm socket
13mm socket
4mm allen key

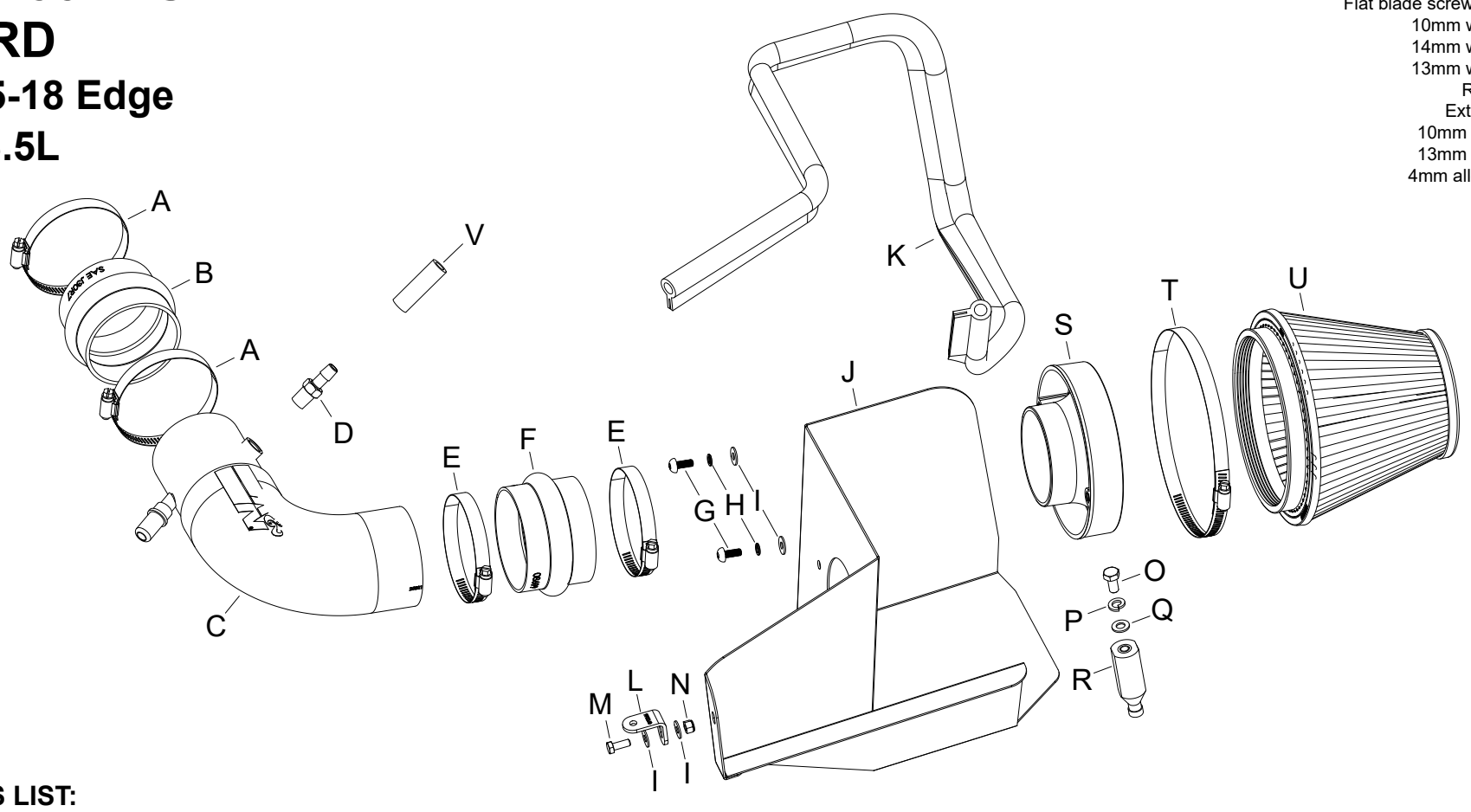

PARTS LIST:

	Description	Qty.	Part #		Description	Qty.	Part #		Description	Qty.	Part #
A	HOSE CLAMP; #52	2	08610	I	WASHER; 6MM FLAT	4	08269	Q	WASHER; 5/16”ID X 5/8”OD	1	08276
B	HOSE; HUMP 3.25"ID X 2-5/8"L	1	08171	J	HEAT SHIELD; MILD	1	073285	R	STANDOFF; AIRBOX	1	06532
C	TUBE; 3.25"OD TO 3.5"OD	1	25821S	K	EDGE TRIM; 56”L	1	102490	S	ADAPTER; UNIVERSAL, 6"	1	21512-1
D	VENT, STRT, 3/8"HOSE, 1/4"	1	08047	L	BRACKET; 69-2521, "L", SML	1	070066A	T	HOSE CLAMP; #104	1	08697
E	HOSE CLAMP; #56	2	08620	M	BOLT; M6-1.00 X 16MM	1	07812	U	AIR FILTER	1	RF-10480
F	HOSE; HUMP 3.5"ID X 2.5"L	1	08699	N	NUT; 6MM NYLOCK, HEXHEAD	1	07512	V	HOSE; 3/8"ID X 2"L	1	5-1002
G	BOLT; M6 X 1.00 X 16MM	2	07730	O	BOLT; 8MM-1.25 X 16MM	1	07844				
H	WASHER; M6 SPLIT LOCK ZINC	2	1-3025	P	WASHER; M8 SPLIT LOCK ZINC	1	1-3036				

If you need any assistance please call 1-800-858-3333 to speak with a representative in our Customer Service Center before returning the product.

NOTE: FAILURE TO FOLLOW INSTALLATION INSTRUCTIONS AND NOT USING THE PROVIDED HARDWARE MAY DAMAGE THE INTAKE TUBE, THROTTLE BODY AND ENGINE.

TO START:

1. Turn off the ignition and disconnect the negative battery cable.
NOTE: Disconnecting the negative battery cable erases pre-programmed electronic memories. Write down all memory settings before disconnecting the negative battery cable. Some radios will require an anti-theft code to be entered after the battery is reconnected. The anti-theft code is typically supplied with your owner’s manual. In the event your vehicles anti-theft code cannot be recovered, contact an authorized dealership to obtain your vehicles anti-theft code.



2. Loosen the hose clamp that secures the intake tube to the throttle body.



3. Disconnect the crank case vent hose from the factory intake tube and unhook the vent line that is attached to the tube.



4. Disconnect the EVAP vent line and fitting from the intake tube. Loosen the hose clamp securing the intake tube to the air filter housing.



5. Remove the intake tube from the vehicle.
NOTE: K&N Engineering, Inc., recommends that customers do not discard factory air intake.



6. Remove the two bolts securing the fresh air intake duct to the core support.
NOTE: These bolts will be reused in a later step.

trailfortress.com/k-n-performance-air-intake-system-77-2592ks