TRAIL FORTRESS

BUILT FOR THE TRAIL. CHECKED FOR YOUR TRUCK.

K&N 77-2588KTK Installation Instructions

Metal Intake for Ford Super Duty (2017-2019)

Part number: 77-2588KTK

trailfortress.com/k-n-performance-air-intake-system-77-2588ktk

Scan for fitment, price and install help

NOT LEGAL FOR SALE OR USE ON ANY POLLUTION CONTROLLED MOTOR VEHICLE IN CALIFORNIA.

INSTALLATION INSTRUCTIONS

77-2588KTK
FORD
2017-19 F-250 / F-350
V8-6.2L

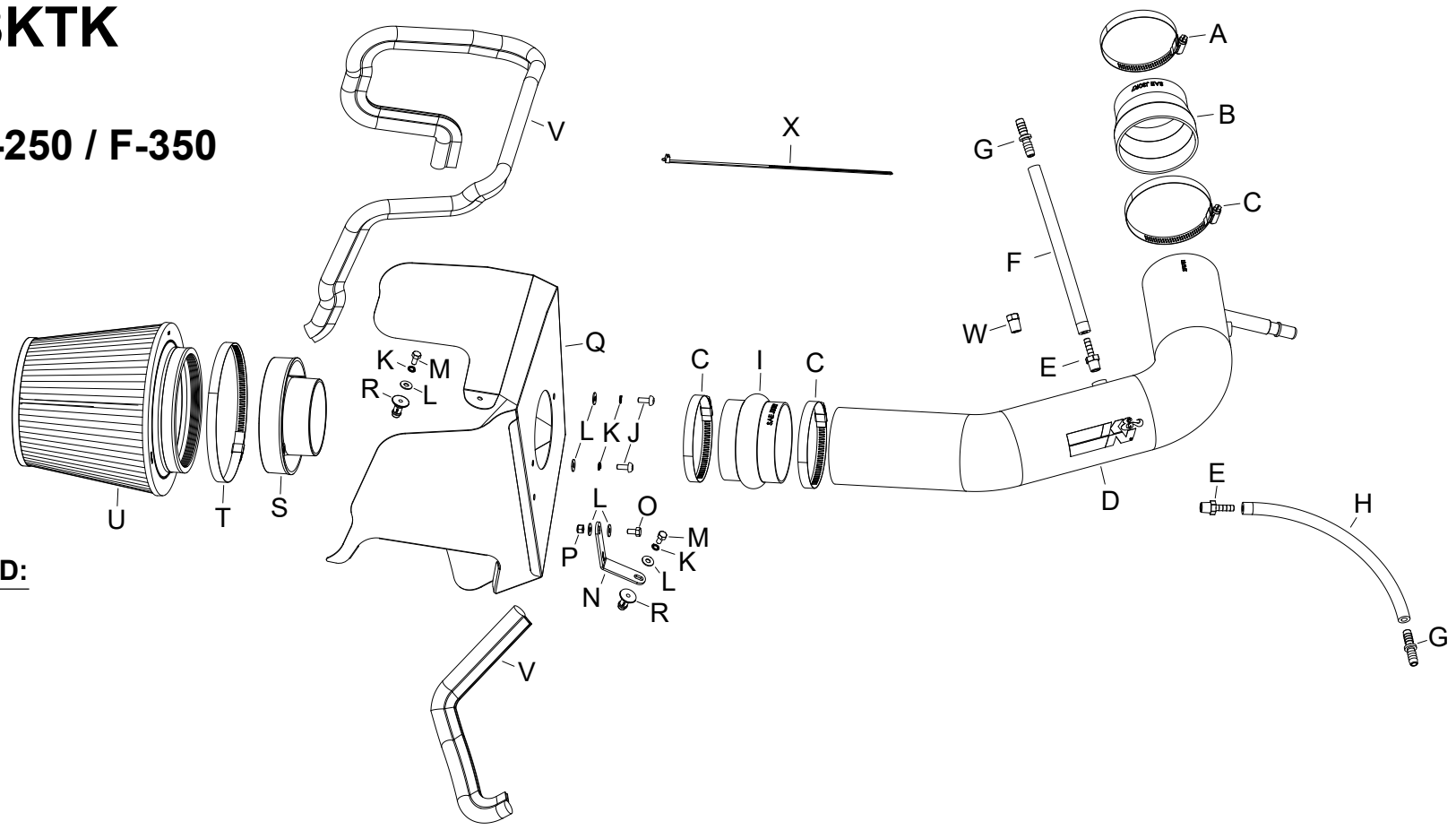

TOOLS NEEDED:

Flat blade screw driver
ratchet
extension
10mm socket
10mm wrench
4mm allen key

PARTS LIST:

	Description	Qty.	Part #		Description	Qty.	Part #		Description	Qty.	Part #
A	HOSE CLAMP #56	1	08620	I	HOSE; 4" ID X 3" L HUMP	1	08418	Q	HEAT SHIELD	1	073251
B	HOSE; 4"ID TO 3.5"ID X 3"L	1	08497	J	BOLT; M6 X 1.00 X 16MM, SS	2	07730	R	MOUNT, PLASTIC AIRBOX	2	8-186-1
C	HOSE CLAMP #64 STAINLESS	3	08645	K	WASHER, M6 SPLIT LOCK ZINC	4	1-3025	S	ADAPTOR; #454	1	27300
D	INTAKE TUBE	1	27675TK	L	WASHER; 6MM FLAT	6	08269	T	HOSE CLAMP; #104	1	08697
E	VENT; STRT, 3/8"HOSE, 1/4"	2	08047	M	BOLT; M6 X 1.00 X 12MM, SS	2	07727	U	FILTER CHARGER	1	RU-5179
F	HOSE; 3/8"ID X 8"L	1	5-1008	N	BRACKET; L, STL	1	064346	V	EDGE TRIM (57")	1	102470
G	VENT; STRT 3/8"HOSE	2	08041	O	BOLT; 6MM-1.00 X 16MM	1	07812	W	PLUG; 1/4 NPT, PLASTIC	1	08032
H	HOSE; 3/8"ID X 6"L	1	5-1006	P	NUT; 6MM NYLOCK, HEXHEAD	1	07512	X	CABLE TIES; 11" BLACK	1	21590

If you need any assistance please call 1-800-858-3333 to speak with a representative in our Customer Service Center before returning the product.

NOTE: FAILURE TO FOLLOW INSTALLATION INSTRUCTIONS AND NOT USING THE PROVIDED HARDWARE MAY DAMAGE THE INTAKE TUBE, THROTTLE BODY AND ENGINE.

TO START:

1. Turn off the ignition and disconnect the negative battery cable.
NOTE: Disconnecting the negative battery cable erases pre-programmed electronic memories. Write down all memory settings before disconnecting the negative battery cable. Some radios will require an anti-theft code to be entered after the battery is reconnected. The anti-theft code is typically supplied with your owner's manual. In the event your vehicles anti-theft code cannot be recovered, contact an authorized dealership to obtain your vehicles anti-theft code.



2. Release the spring clamp that secures the EVAP vent line to the intake plenum. Then release the locking tap on the Crankcase vent fitting and disconnect the crank case vent from the intake plenum.



3. Disconnect the vent line from the intake plenum where shown, then unhook the heater hose clip from the intake plenum.
NOTE: Some vehicles may not be equipped with this vent line.



4. Loosen the hose clamps that secure the intake plenum to the air filter housing and to the throttle body, then remove the intake plenum from the vehicle.



5. Unhook the wiring pigtail from the upper air filter housing.
NOTE: Some vehicles may not have this pigtail attached.



6. Remove the two bolts that secure the air filter housing to the mounting bracket and remove the air filter housing from the vehicle.
NOTE: K&N Engineering, Inc., recommends that customers do not discard factory air intake.