TRAIL FORTRESS

BUILT FOR THE TRAIL. CHECKED FOR YOUR TRUCK.

K&N 77-2575KS Installation Instructions

Silver Metal Intake for Ford Explorer (2011-2019)

Part number: 77-2575KS

trailfortress.com/k-n-performance-air-intake-system-77-2575ks

Scan for fitment, price and install help

INTAKE SYSTEMS FOR VEHICLES LISTED ARE 50 STATE LEGAL. SEE KNFILTERS.COM FOR CARB STATUS ON EACH PART FOR A SPECIFIC VEHICLE.

INSTALLATION INSTRUCTIONS

77-2575KS
FORD
2011-18 Explorer
V6-3.5L

NOTE: Excluding Ecoboost

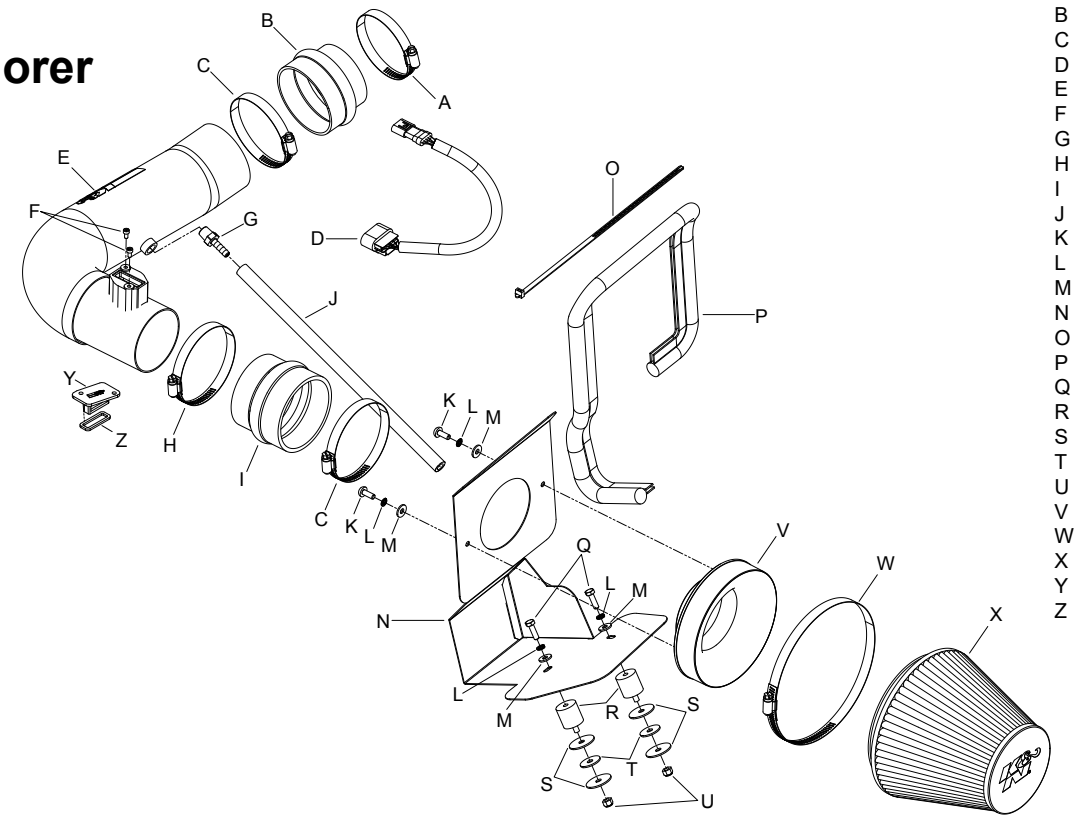

PARTS LIST

	Description	Qty.	Part #
A	HOSE CLAMP #48	1	08601
B	HOSE; HUMP 3.5” TO 3”ID X 2.5”L	1	084079
C	HOSE CLAMP # 56	2	08620
D	MAF EXTENSION HARNESS	1	21780
E	INTAKE TUBE; (SILVER)	1	27542KS
F	BOLT; 8-32 X 5/16” SOCKET	2	1-2023
G	VENT; STRT, 3/8” HOSE, 1/4” NPT	1	08047
H	HOSE CLAMP #52	1	08610
I	HOSE; HUMP 3.25”/3.5” X 3”	1	5-576
J	HOSE; 3/8”ID X 14”L	1	5-1014
K	BOLT; M6 X 1 X 16MM	2	07730
L	WASHER, M6 SPLIT LOCK	4	1-3025
M	WASHER; 6MM FLAT	4	08269
N	HEAT SHIELD	1	074072
O	CABLE TIES, 11” BLK.	1	21590
P	EDGE TRIM; 35”L	1	102471A
Q	BOLT; M6-1 X 16MM	2	07812
R	STUD; RUBBER MOUNT, M6 X 1	2	02033
S	WASHER; 1.25”OD X .28 HOLE	4	08151
T	WASHER; 1” X .300 X .063	2	21685
U	NUT; 6MM NYLOCK	2	07512
V	ADAPTER; 6” FILTER	1	21512-1
W	HOSE CLAMP #104	1	08697
X	AIR FILTER	1	RU-1048
Y	BLOCK OFF	1	21508
Z	GASKET	1	09076

TOOLS NEEDED:

3mm Allen Wrench
4mm Allen Wrench
8mm Socket
10mm Socket
10mm Wrench
Extension
Flat Blade Screwdriver
Pliers
Ratchet
T20 Torx Wrench

If you need any assistance please call 1-800-858-3333 to speak with a representative in our Customer Service Center before returning the product.

NOTE: FAILURE TO FOLLOW INSTALLATION INSTRUCTIONS AND NOT USING THE PROVIDED HARDWARE MAY DAMAGE THE INTAKE TUBE, THROTTLE BODY AND ENGINE.

TO START:

1. Turn off the ignition and disconnect the negative battery cable.
NOTE: Disconnecting the negative battery cable erases pre-programmed electronic memories. Write down all memory settings before disconnecting the negative battery cable. Some radios will require an anti-theft code to be entered after the battery is reconnected. The anti-theft code is typically supplied with your owner’s manual. In the event your vehicles’ anti-theft code cannot be recovered, contact an authorized dealership to obtain your vehicles anti-theft code.



2. Disconnect the mass air sensor electrical connection.



3. Disconnect the crank case vent tube from the factory intake tube.



4. Loosen the hose clamp securing the factory intake tube to the throttle body and disconnect the EVAP vent line from the EVAP check valve.



5. Release the two upper air box retaining clips and then remove the upper air box and intake tube assembly from the vehicle.



6. Remove the two fresh air duct retaining bolts shown.



7. Remove the lower air box/fresh air duct from the vehicle.



8. Remove the two air box mounting grommets shown.
NOTE: K&N Engineering, Inc., recommends that customers do not discard factory air intake.



9. Install the two provided rubber mounted studs onto the air box mounting bracket as shown.
NOTE: Be sure to place a fender washer on the top and bottom sides of the air box mounting bracket.

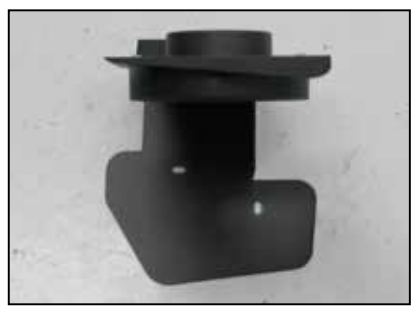

10. Install the K&N® filter adapter into the heat shield as shown and secure with the provided hardware.

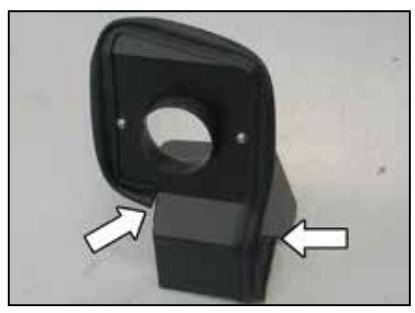

11. Install the provided edge trim onto the heat shield as shown.
NOTE: Trimming of the edge trim will be necessary.