TRAIL FORTRESS

BUILT FOR THE TRAIL. CHECKED FOR YOUR TRUCK.

K&N 77-1568KTK Installation Instructions

Metal Intake for Ram 2500 & 3500 (2014-2018)

Part number: 77-1568KTK

trailfortress.com/k-n-performance-air-intake-system-77-1568ktk

Scan for fitment, price and install help

INTAKE SYSTEMS FOR VEHICLES LISTED ARE 50 STATE LEGAL. SEE KNFILTERS.COM FOR CARB STATUS ON EACH PART FOR A SPECIFIC VEHICLE.

INSTALLATION INSTRUCTIONS

77-1568KTK
RAM
2014-18 Ram 2500 / 3500
V8-6.4L

NOTE: This kit was not designed to fit vehicles with a body lift.

TOOLS NEEDED:

Flat blade screw driver
T20 torx key
4mm allen key
3mm allen key

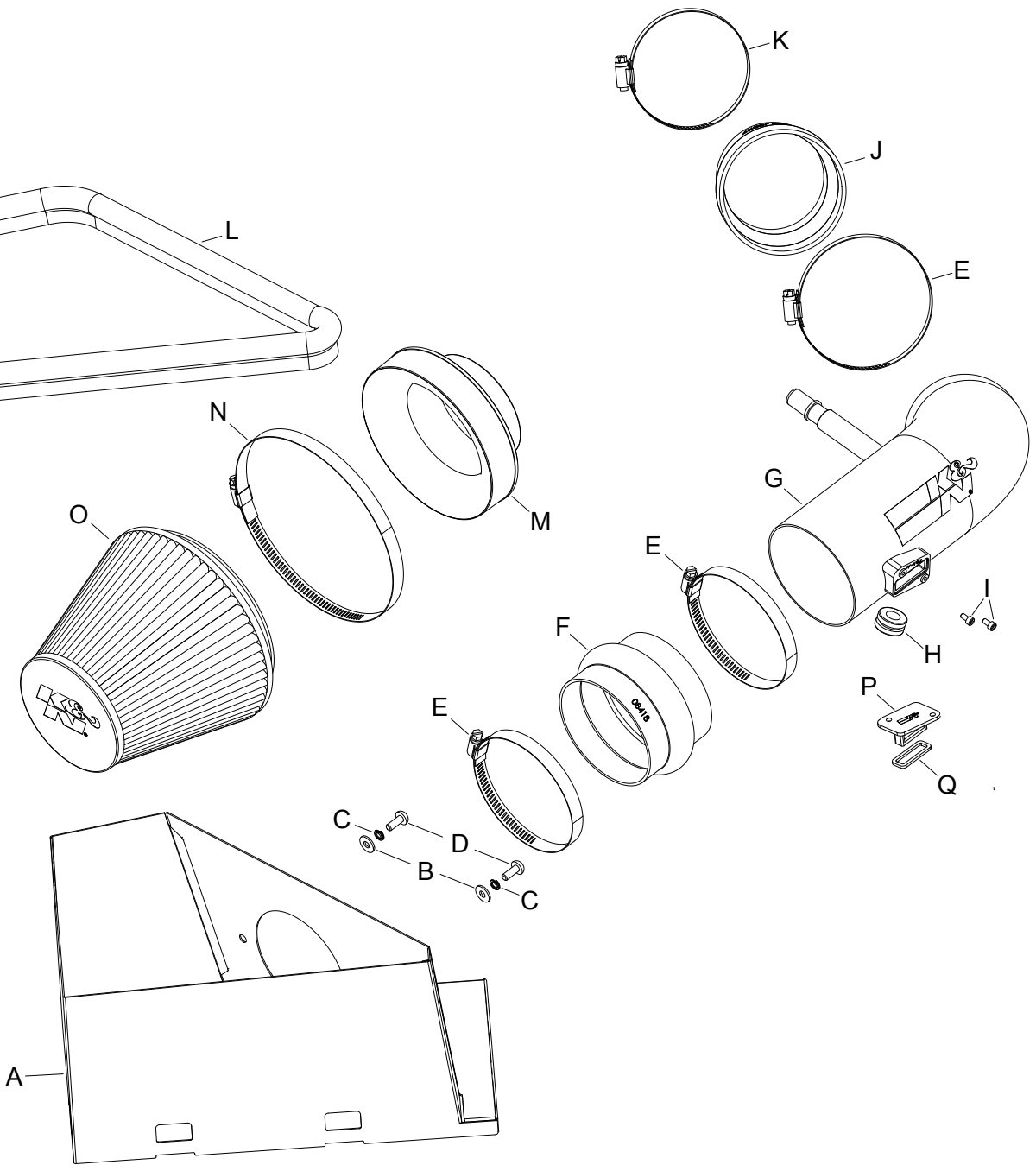

PARTS LIST:

	Description	Qty.	Part #
A	HEAT SHIELD	1	073192A
B	WASHER; 6MM FLAT	2	08269
C	WASHER, M6 SPLIT LOCK	2	1-3025
D	BOLT; M6 X 1 X 16MM	2	07730
E	HOSE CLAMP #64 STAINLESS	3	08645
F	HOSE; HUMP 4"ID X 3"L	1	08418
G	INTAKE TUBE (AL)	1	27567TK
H	GROMMET; 1"OD,1/2"ID,1/2"	1	08064
I	BOLT; M4-.7 X 8MM	2	07733
J	HOSE; 4"ID TO 3.5"ID X 3"L	1	08497
K	HOSE CLAMP #56	1	08620
L	EDGE TRIM (39")	1	102496A
M	ADAPTOR; #454	1	27300
N	HOSE CLAMP #104	1	08697
O	AIR FILTER	1	RU-1048
P	BLOCK OFF	1	21508
Q	GASKET	1	09076

If you need any assistance please call 1-800-858-3333 to speak with a representative in our Customer Service Center before returning the product.

NOTE: FAILURE TO FOLLOW INSTALLATION INSTRUCTIONS AND NOT USING THE PROVIDED HARDWARE MAY DAMAGE THE INTAKE TUBE, THROTTLE BODY AND ENGINE.

TO START:

1. Turn off the ignition and disconnect the negative battery cable.
NOTE: Disconnecting the negative battery cable erases pre-programmed electronic memories. Write down all memory settings before disconnecting the negative battery cable. Some radios will require an anti-theft code to be entered after the battery is reconnected. The anti-theft code is typically supplied with your owner's manual. In the event your vehicles anti-theft code cannot be recovered, contact an authorized dealership to obtain your vehicles anti-theft code.



2. Lift up and remove the decorative engine cover.



3. Disconnect the inlet air temperature sensor and humidity sensor electrical connections.
NOTE: Some vehicles may not be equiped with a humidity sensor.

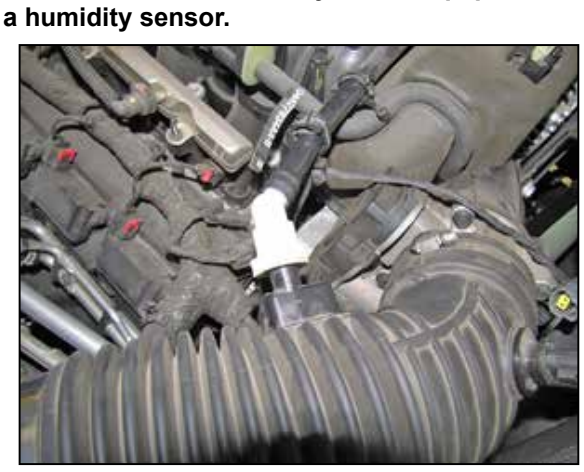

4. Depress the locking tab and then disconnect the crank case vent hose from the factory intake tube.



5. Loosen the hose clamp securing the factory intake tube to the throttle body.



6. Release the four locking tabs securing the air filter housing lid and then remove the housing lid and factory intake tube from the vehicle. Remove the factory air filter.
NOTE: K&N Engineering, Inc., recommends that customers do not discard factory air intake.