TRAIL FORTRESS

BUILT FOR THE TRAIL. CHECKED FOR YOUR TRUCK.

K&N 77-1567KS Installation Instructions

Silver Metal Intake for Grand Cherokee & Durango

Part number: 77-1567KS

trailfortress.com/k-n-performance-air-intake-system-77-1567ks

Scan for fitment, price and install help

INTAKE SYSTEMS FOR VEHICLES LISTED ARE 50 STATE LEGAL. SEE KNFILTERS.COM FOR CARB STATUS ON EACH PART FOR A SPECIFIC VEHICLE.

INSTALLATION INSTRUCTIONS

77-1567KS
JEEP / DODGE
2012-2021 Grand Cherokee SRT
2018-2023 Durango
V8-6.4L

TOOLS NEEDED:

Ratchet
Extension
10mm Socket
10mm Wrench
Flat Blade Screw Driver
4mm Allen Key

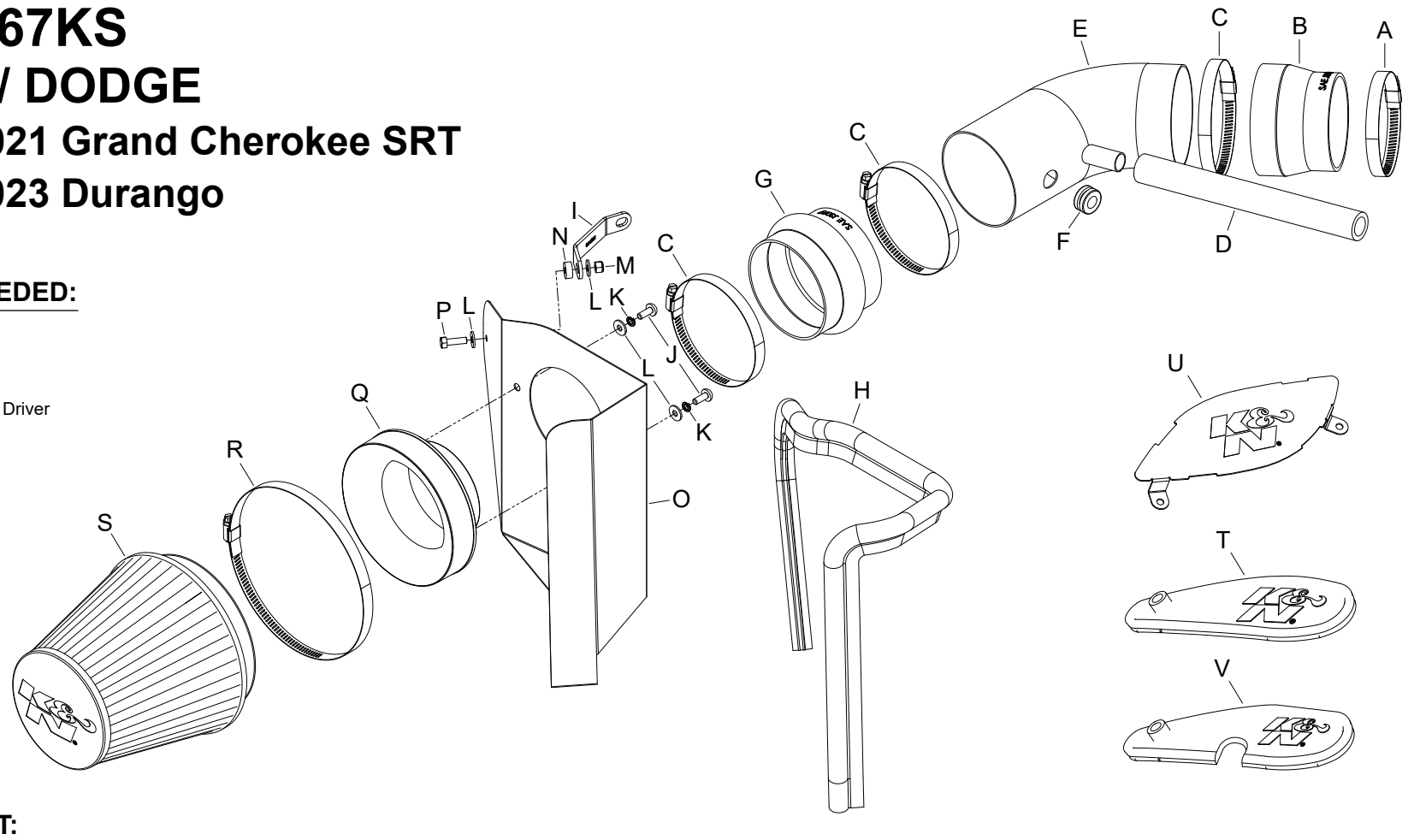

PARTS LIST:

	Description	Qty.	Part #		Description	Qty.	Part #		Description	Qty.	Part #
A	HOSE CLAMP #56	1	08620	H	EDGE TRIM; (39"L)	1	102496	O	HEAT SHIELD	1	073191
B	HOSE; 4"ID TO 3.5"ID X 3"L	1	08497	I	BRACKET; "C"	1	064331	P	BOLT; M6 X 1 X 20MM, HEX	1	07795
C	HOSE CLAMP #64 STAINLESS	3	08645	J	BOLT; M6 X 1 X 16MM BTNHD	2	07730	Q	ADAPTOR; #454	1	27300
D	HOSE; 3/4"ID X 10"L	1	5-4010	K	WASHER, M6 SPLIT LOCK ZINC	2	1-3025	R	HOSE CLAMP # 104	1	08697
E	INTAKE TUBE; (AL) SILVER	1	27566S	L	WASHER; 6MM FLAT	4	08269	S	AIR FILTER	1	RU-1042
F	GROMMET; 1"OD, 1/2"ID, 1/2"	1	08064	M	NUT; 6MM NYLOCK, HEXHD	1	07512	T	BLOCK OFF; EPDM	1	21575
G	HOSE; HUMP 4”ID X 3”L	1	08418	N	SPACER: .625"OD X .250"ID	1	06555	U	BLOCK OFF	1	073262
								V	BLOCK OFF; HOOD VENT	1	21597

If you need any assistance please call 1-800-858-3333 to speak with a representative in our Customer Service Center before returning the product.

NOTE: FAILURE TO FOLLOW INSTALLATION INSTRUCTIONS AND NOT USING THE PROVIDED HARDWARE MAY DAMAGE THE INTAKE TUBE, THROTTLE BODY AND ENGINE.

TO START:

1. Turn off the ignition and disconnect the negative battery cable.
NOTE: Disconnecting the negative battery cable erases pre-programmed electronic memories. Write down all memory settings before disconnecting the negative battery cable. Some radios will require an anti-theft code to be entered after the battery is reconnected. The anti-theft code is typically supplied with your owner’s manual. In the event your vehicles anti-theft code cannot be recovered, contact an authorized dealership to obtain your vehicles anti-theft code.



2. Disconnect the inlet air temperature air sensor electrical connection.



3. Remove the driver’s side decorative engine cover.



4. Disconnect the crank case vent hose from the valve cover port.



5. Loosen the hose clamp securing the factory intake tube to the throttle body.



6. Lift up the air filter assembly to dislodge it from the mounting grommets and the remove the complete assembly from the vehicle.
NOTE: K&N Engineering, Inc., recommends that customers do not discard factory air intake.