TRAIL FORTRESS

BUILT FOR THE TRAIL. CHECKED FOR YOUR TRUCK.

K&N 77-1564KS Installation Instructions

Silver Metal Intake for Ram 1500 (2013-2018)

Part number: 77-1564KS

trailfortress.com/k-n-performance-air-intake-system-77-1564ks

Scan for fitment, price and install help

INTAKE SYSTEMS FOR VEHICLES LISTED ARE 50 STATE LEGAL. SEE KNFILTERS.COM FOR CARB STATUS ON EACH PART FOR A SPECIFIC VEHICLE.

INSTALLATION INSTRUCTIONS

77-1564KS
RAM
2013-21 Ram 1500
V6-3.6L

NOTE: This kit was not designed to fit vehicles with a body lift.

Note Test groups: KCRXT03.65P7, LCRXT03.65P7, MCRXT03.65P7.

TOOLS NEEDED:

Flat Blade screw driver
Ratchet
Extension
13mm socket
4mm allen key.

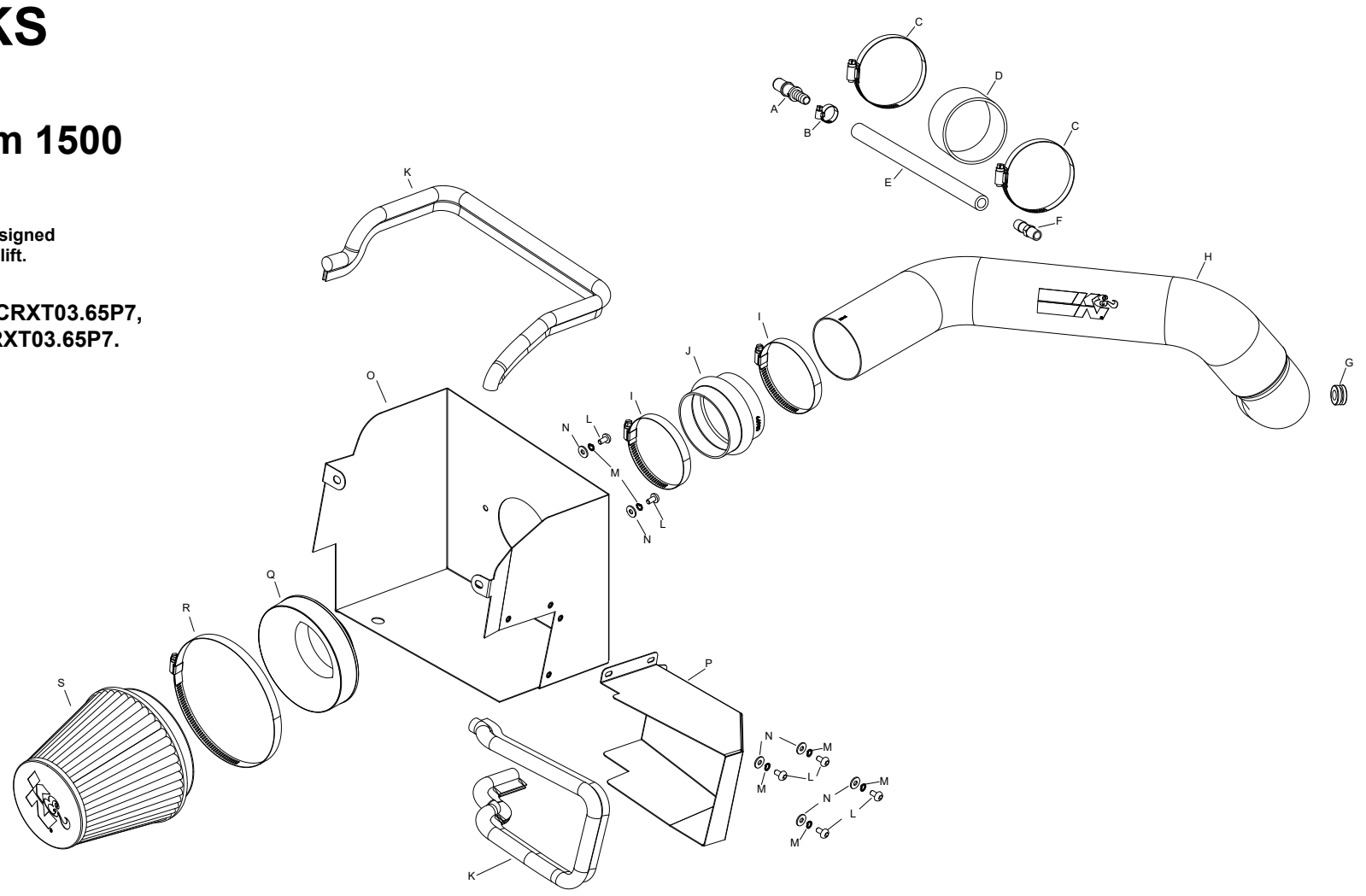

PARTS LIST:

	Description	Qty.	Part #		Description	Qty.	Part #		Description	Qty.	Part #
A	FITTING; VENT, 1/2” BARB	1	82629	H	TUBE; 3.25”OD TO 3.5”OD (AL)	1	27622KS	N	WASHER; 6MM FLAT	6	08269
B	HOSE CLAMP #6 MINI	1	08407	I	HOSE CLAMP #56	2	08620	O	HEAT SHIELD	1	073173
C	HOSE CLAMP #52	2	08610	J	HOSE; HUMP 3.5”ID X 2.5”L	1	08699	P	HEAT SHIELD; SCOOP	1	073174
D	HOSE; 3.25" ID X 2"L	1	08690	K	EDGE TRIM; 55”L	1	102480	Q	ADAPTER; 6” FILTER	1	21512-1
E	HOSE; 1/2"ID X 12"L	1	087031	L	BOLT; M6-1 X 12MM BTNHD	6	07794	R	HOSE CLAMP #104	1	08697
F	VENT; STRT 1/2" HOSE, 1/4”	1	080022	M	WASHER, M6 SPLIT LOCK ZINC	6	1-3025	S	AIR FILTER	1	RU-1042
G	GROMMET; 1" OD, 1/2" ID, 1/2"	1	08064								

If you need any assistance please call 1-800-858-3333 to speak with a representative in our Customer Service Center before returning the product.

NOTE: FAILURE TO FOLLOW INSTALLATION INSTRUCTIONS AND NOT USING THE PROVIDED HARDWARE MAY DAMAGE THE INTAKE TUBE, THROTTLE BODY AND ENGINE.

TO START:

1. Turn off the ignition and disconnect the negative battery cable.
NOTE: Disconnecting the negative battery cable erases pre-programmed electronic memories. Write down all memory settings before disconnecting the negative battery cable. Some radios will require an anti-theft code to be entered after the battery is reconnected. The anti-theft code is typically supplied with your owner’s manual. In the event your vehicles anti-theft code cannot be recovered, contact an authorized dealership to obtain your vehicles anti-theft code.



2. Disconnect the Inlet air temperature sensor electrical connection and loosen the hose clamp securing the intake plenum to the throttle body.



3. Disconnect the crank case vent from the intake plenum.



4. Loosen the hose clamp securing the intake hose to the factory air box.



5. Lift up the intake plenum to dislodge it from the mounting grommets and then remove the plenum from the vehicle.



6. Lift the air box assembly off of the mounting studs and then remove the air box from the vehicle.
NOTE: K&N Engineering, Inc., recommends that customers do not discard factory air intake.