TRAIL FORTRESS

BUILT FOR THE TRAIL. CHECKED FOR YOUR TRUCK.

K&N 77-1561KP Installation Instructions

Polished Metal Intake for Ram 1500, 2500 & 3500

Part number: 77-1561KP

trailfortress.com/k-n-performance-air-intake-system-77-1561kp

Scan for fitment, price and install help

INSTALLATION INSTRUCTIONS

77 Series METAL INTAKE SYSTEMS FOR TRUCKS & SUVs

Legal for use in all 50 states.

77-1561KP
DODGE
2008-18 Ram 1500
2013-18 Ram 2500/3500
V8-5.7L

NOTE: This kit was not designed to fit vehicles with a body lift.

TOOLS NEEDED:

Ratchet
Extension
13mm Socket
10mm Socket
5/16” Socket
10mm Wrench
¾” Wrench
4mm Allen Wrench
Flat Blade Screwdriver

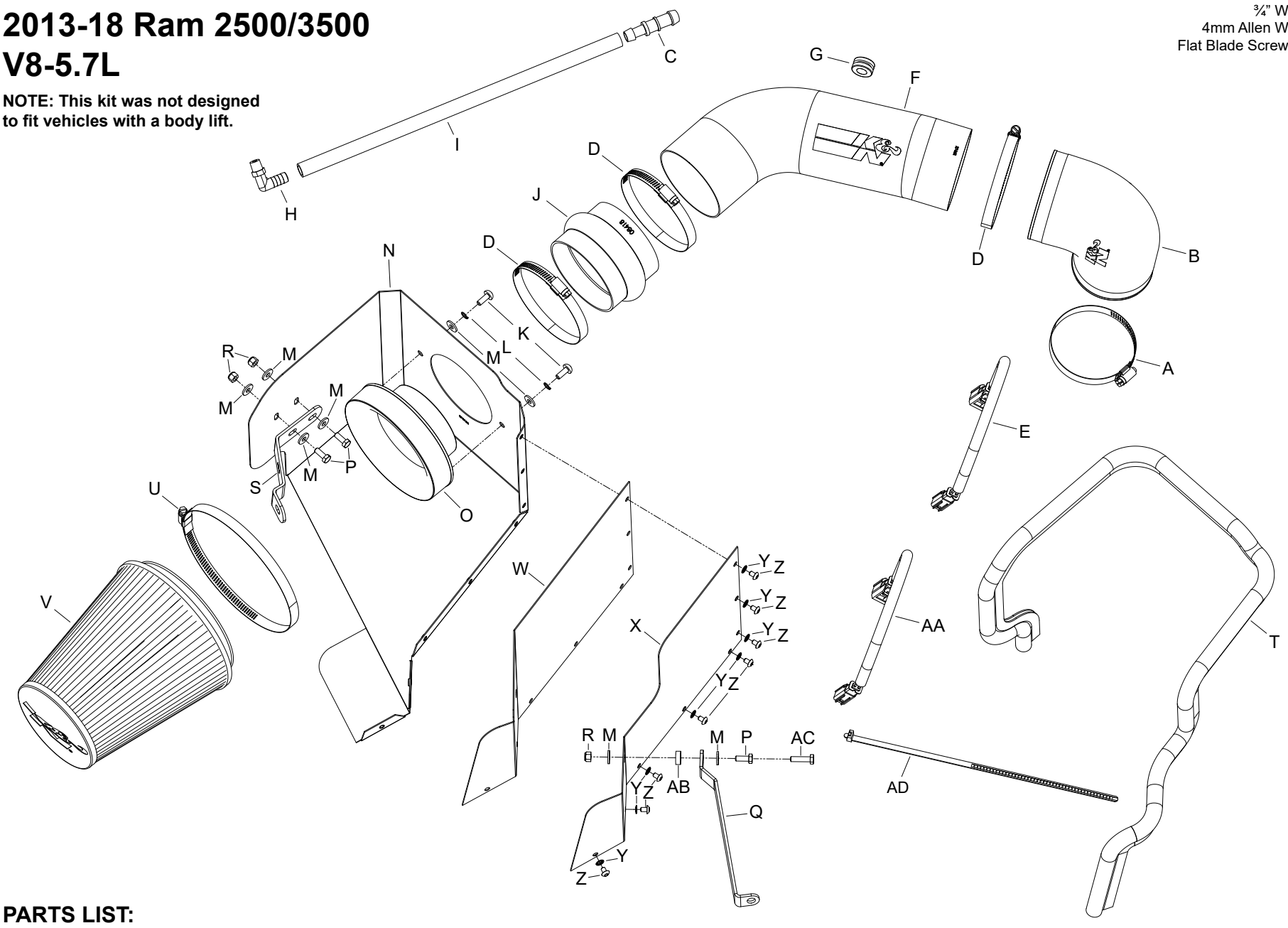

PARTS LIST:

	Description	Qty.	Part #		Description	Qty.	Part #		Description	Qty.	Part #
A	HOSE CLAMP #56	1	08620	K	BOLT; M6 X 1 X 16MM, BTNHD	2	07730	U	HOSE CLAMP # 104	1	08697
B	HOSE; 4” TO 3.5” ID 90	1	084086-1	L	WASHER; 1/4” LOCK, ZN	2	08198	V	AIR FILTER	1	RU-1044
C	HOSE ADAPTER, 3/4” X 5/8”	1	8-171	M	WASHER; 1/4”ID X 5/8”OD	8	08275	W	HEAT SHIELD A	1	073127A
D	HOSE CLAMP #64 STAINLESS	3	08645	N	HEAT SHIELD	1	073126A	X	HEAT SHIELD B	1	073128A
E	EXTENSION HARNESS	1	21681	O	ADAPTOR; #454	1	27300	Y	WASHER; 5MM INTERNAL	8	07724
F	INTAKE TUBE; (AL)	1	27462AKP	P	BOLT; M6-1 X 16MM, HEX	3	07812	Z	BOLT; M5 X .8 X 8MM, BTNHD	8	07740
G	GROMMET; 1”OD,1/2”ID	1	08064	Q	BRACKET; “Z”	1	083103-1A	AA	EXTENSION HARNESS	1	21680
H	FITTING; VENT, 1/4”NPT, 90	1	08525-1	R	NUT; 6MM NYLOCK, HEX	3	07512	AB	SPACER; .625”OD X .250”ID	1	06555
I	HOSE; 5/8”ID X 21”L	1	5-7021	S	BRACKET; “L”	1	083127A	AC	BOLT; M6 X 1 X 20MM, HEX	1	07795
J	HOSE; HUMP 4”ID X 3”L	1	08418	T	EDGE TRIM; (55”L)	1	102480	AD	CABLE TIES; 11” BLACK	1	21590

If you need any assistance please call 1-800-858-3333 to speak with a representative in our Customer Service Center before returning the product.

NOTE: FAILURE TO FOLLOW INSTALLATION INSTRUCTIONS AND NOT USING THE PROVIDED HARDWARE MAY DAMAGE THE INTAKE TUBE, THROTTLE BODY AND ENGINE.

TO START:

1. Turn off the ignition and disconnect the negative battery cable.
NOTE: Disconnecting the negative battery cable erases pre-programmed electronic memories. Write down all memory settings before disconnecting the negative battery cable. Some radios will require an anti-theft code to be entered after the battery is reconnected. The anti-theft code is typically supplied with your owner’s manual. In the event your vehicles’ anti-theft code cannot be recovered, contact an authorized dealership to obtain your vehicles anti-theft code.



2. Release the red locking tab and then disconnect the inlet air temperature electrical connection.



3. Loosen the hose clamp that secures the intake tube to the throttle body.