TRAIL FORTRESS

BUILT FOR THE TRAIL. CHECKED FOR YOUR TRUCK.

K&N 77-1560KTK Installation Instructions

Metal Intake for Durango & Grand Cherokee (2011-2015)

Part number: 77-1560KTK

trailfortress.com/k-n-performance-air-intake-system-77-1560ktk

Scan for fitment, price and install help

INTAKE SYSTEMS FOR VEHICLES LISTED ARE 50 STATE LEGAL. SEE KNFILTERS.COM FOR CARB STATUS ON EACH PART FOR A SPECIFIC VEHICLE.

INSTALLATION INSTRUCTIONS

77-1560KTK
DODGE / JEEP
2011-15 Durango
2011-15 Grand Cherokee
V6-3.6L

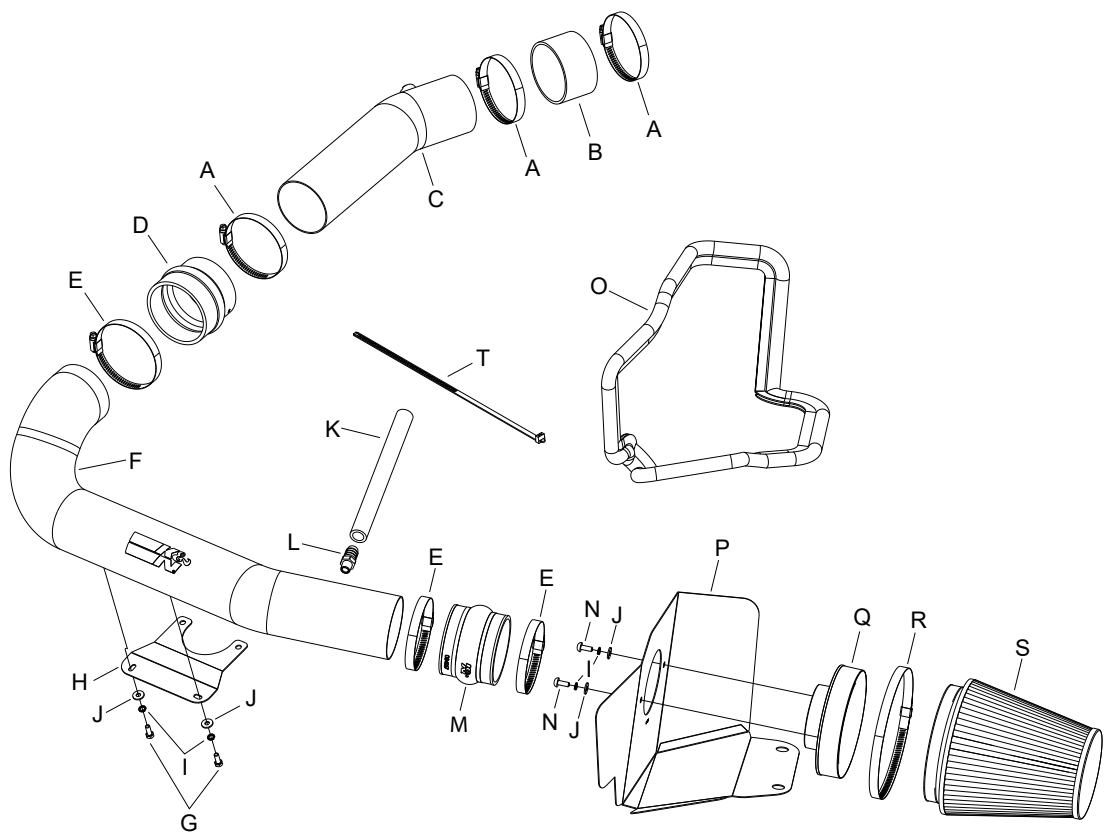

NOTE: This kit was not designed to fit vehicles with a body lift.

TOOLS NEEDED:

Flat Blade Screwdriver
Ratchet
Extension
10mm Socket
4mm Allen Wrench
Pliers
Knife

PARTS LIST:

	Description	Qty.	Part #		Description	Qty.	Part #		Description	Qty.	Part #
A	HOSE CLAMP #52	3	08610	H	BRACKET; FLAT	1	083150	O	EDGE TRIM; 55”L	1	102480A
B	HOSE; 3.25” ID X 2”L	1	08690	I	WASHER, M6 SPLIT LOCK ZINC	4	1-3025	P	HEAT SHIELD	1	074087A
C	INTAKE TUBE; (A)	1	27446-1TK	J	WASHER, 6MM FLAT	4	08269	Q	ADAPTER; UNIVERSAL, 6” FILTER	1	21512-1
D	HOSE; HUMP 3.25/3.5” X 3”	1	5-576	K	HOSE; 5/8” ID X 9.75” L	1	084047	R	HOSE CLAMP #104	1	08697
E	HOSE CLAMP #56	3	08620	L	VENT; STRT, 5/8 BARBED 1/4 NPT	1	82638	S	AIR FILTER	1	RU-1041
F	INTAKE TUBE; (B)	1	27447TK	M	HOSE; HUMP 3.5” ID X 3”L	1	084057	T	CABLE TIES 11”	1	21590
G	BOLT, M6-1 X 16MM	2	07812	N	BOLT; M6 X 1 X 16MM	2	07730				

If you need any assistance please call 1-800-858-3333 to speak with a representative in our Customer Service Center before returning the product.

NOTE: FAILURE TO FOLLOW INSTALLATION INSTRUCTIONS AND NOT USING THE PROVIDED HARDWARE MAY DAMAGE THE INTAKE TUBE, THROTTLE BODY AND ENGINE.

TO START:

1. Turn off the ignition and disconnect the negative battery cable.
NOTE: Disconnecting the negative battery cable erases pre-programmed electronic memories. Write down all memory settings before disconnecting the negative battery cable. Some radios will require an anti-theft code to be entered after the battery is reconnected. The anti-theft code is typically supplied with your owner’s manual. In the event your vehicles’ anti-theft code cannot be recovered, contact an authorized dealership to obtain your vehicles anti-theft code.



2. Lift up the engine cover to unhook it from the mounting grommets and then remove the engine cover from the engine.



3. Disconnect the inlet air temperature sensor electrical connection.



4. Disconnect the crank case vent tube from the air box as shown.



5. Release the two clips that secure the upper air box.



6. Remove the intake tube and upper air box from the vehicle as shown.
NOTE: The intake tube is mounted in two locations with grommets.
NOTE: Some models may have an EVAP solenoid that needs to be unhooked from the intake tube.



6a. If equipped with an EVAP solenoid attached to the intake tube, unhook the solenoid from the intake tube and secure it to the engine with the provided tie wrap.



7. Unhook the trim seal from the fresh air intake scoop.



8. Lift up the lower air box to dislodge it from the mounting grommets, then remove the lower air box from the vehicle.
NOTE: K&N Engineering, Inc., recommends that customers do not discard factory air intake.