TRAIL FORTRESS

BUILT FOR THE TRAIL. CHECKED FOR YOUR TRUCK.

K&N 71-3110 Installation Instructions

Dryflow Intake for Silverado 1500 & Escalade

Part number: 71-3110

trailfortress.com/k-n-performance-air-intake-system-71-3110

Scan for fitment, price and install help

INSTALLATION INSTRUCTIONS

Not legal for sale or use in California on any pollution controlled motor vehicle.

71-3110
CHEVROLET / GMC / CADILLAC
2019-25 Silverado / Sierra
2021-25 Tahoe / Suburban
2021-25 Yukon / Yukon XL
2021-25 Escalade / Escalade ESV
V8-5.3L / 6.2L

TOOLS NEEDED:

phillips screw driver
flat blade screw driver
ratchet
extension
10mm deep socket
3mm allen key
4mm allen key
t10 torx
t20 torx
pick

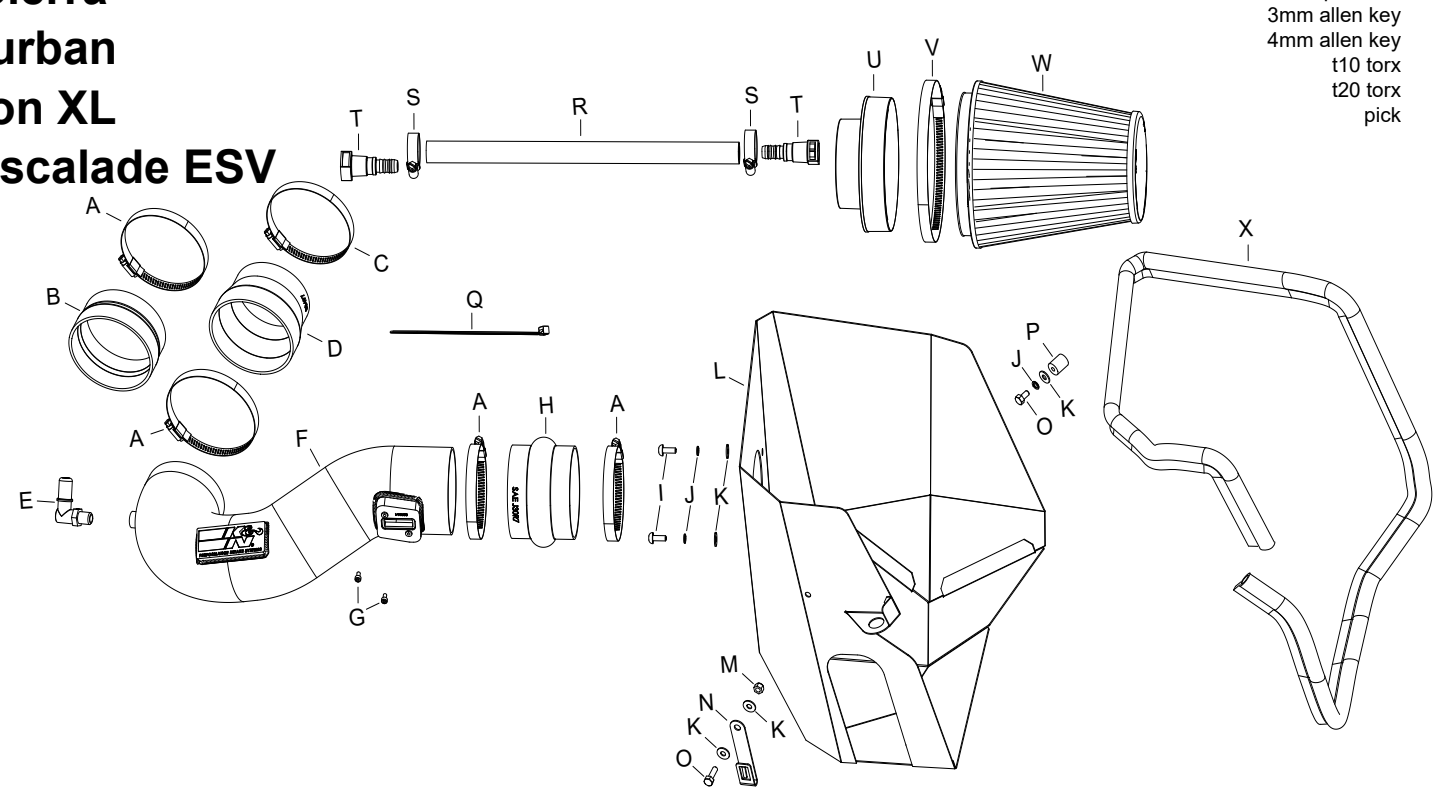

PARTS LIST:

	Description	Qty.	Part #		Description	Qty.	Part #		Description	Qty.	Part #
A	HOSE CLAMP; #64, BLACK	4	08645KA	I	BOLT; M6-1 X 12MM, BTNHD	2	07794	Q	CABLE TIE; 11" BLACK	1	21590
B	REDUCER; 4"ID X 3.875"ID	1	KITRDCR19	J	WASHER; M6 SPLIT LOCK ZINC	3	1-3025	R	HOSE; 5/8"ID X 15"L	1	5-7015
C	HOSE CLAMP; #56, BLACK	1	08620KA	K	WASHER; 6MM FLAT	5	08269	S	HOSE CLAMP; #10 MINI	2	08411
D	REDUCER; 4"ID X 3.5" X 2.027"L	1	KITRDCR23	L	HEAT SHIELD	1	073283	T	FITTING; QUICK DIS. 16-14MM	2	08526
E	VENT; 90"D, 1/4"NPT, TO .600"	1	82633	M	NUT; 6MM NYLOCK, HEXHD	1	07512	U	ADAPTOR; #454	1	27300
F	TUBE; 4”OD X 19”L, (AL)	1	25820-1TK	N	BRACKET	1	064358A	V	HOSE CLAMP; #104	1	08697KA
G	BOLT; M4-.7 X 8MM, ALNHD	2	07733	O	BOLT; M6 X 1 X 12MM, HEXHD	2	07727	W	AIR FILTER	1	RU-3101HBK
H	HUMP HOSE; 4"ID X 2.5"L	1	KITHUMPHS12	P	THREADED BOSS; 5/8"OD	1	081004	X	EDGE TRIM; 61”L	1	102492

If you need any assistance please call 1-800-858-3333 to speak with a representative in our Customer Service Center before returning the product.

NOTE: FAILURE TO FOLLOW INSTALLATION INSTRUCTIONS AND NOT USING THE PROVIDED HARDWARE MAY DAMAGE THE INTAKE TUBE, THROTTLE BODY AND ENGINE.

TO START:

1. Turn off the ignition and disconnect the negative battery cable.
NOTE: Disconnecting the negative battery cable erases pre-programmed electronic memories. Write down all memory settings before disconnecting the negative battery cable. Some radios will require an anti-theft code to be entered after the battery is reconnected. The anti-theft code is typically supplied with your owner’s manual. In the event your vehicles anti-theft code cannot be recovered, contact an authorized dealership to obtain your vehicles anti-theft code.



2. Disconnect the mass air sensor electrical connection.



3. Depress the locking tabs and then disconnect the crank case vent line from the intake plenum and valve cover vent port.



4. Loosen the hose clamps that secures the intake plenum to the air filter housing and to the throttle body. Disconnect the plenum connections at the air filter housing and then rotate the plenum counter clockwise to disengage the keyed mount and separate it from the throttle body.
NOTE: The wiring harness anchored to the intake plenum will need to be detached before removing the plenum from the vehicle.



5. Remove the two bolts that secure the hood release arm to the hood latch and then remove the arm.

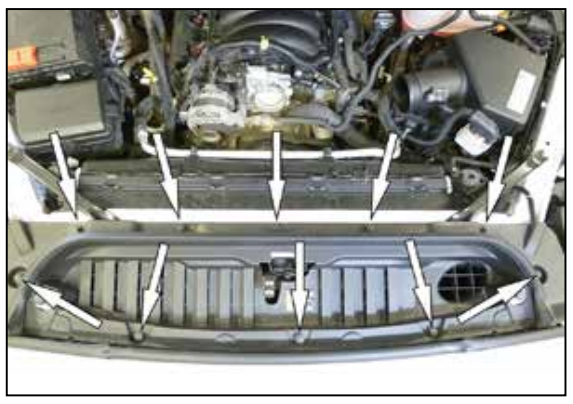

6. Release the ten retaining clips that secure the upper radiator valence and then remove the valence from the vehicle.