TRAIL FORTRESS

BUILT FOR THE TRAIL. CHECKED FOR YOUR TRUCK.

K&N 71-3070 Installation Instructions

Dryflow Intake for GM Full-Size Trucks (2009-2014)

Part number: 71-3070

trailfortress.com/k-n-performance-air-intake-system-71-3070

Scan for fitment, price and install help

INTAKE SYSTEMS FOR VEHICLES LISTED ARE 50 STATE LEGAL. SEE KNFILTERS.COM FOR CARB STATUS ON EACH PART FOR A SPECIFIC VEHICLE.

INSTALLATION INSTRUCTIONS

71-3070

CADILLAC / CHEVROLET / GMC

2009-14 Escalade ESV / EXT
V8-6.2L
2009-13 Avalanche
V8-5.3L / 6.0L
2009-13 Silverado 1500
V8-4.8L / 5.3L / 6.2L
2009-14 Suburban
V8-5.3L / 6.0L
2009-14 Tahoe
V8-4.8L / 5.3L / 6.2L
2009-14 Yukon, Denali / Denali XL / XL 1500
V8-4.8L / 5.3L / 6.2L
2009-13 Sierra, Denali 1500
V8-4.8L / 5.3L / 6.2L

NOTE: EXCLUDES HYBRID MODELS

NOTE: This kit was not designed to fit vehicles with a body lift.

TOOLS NEEDED:

Flat Blade Screwdriver
½" Socket
5/8" Drill Bit
5/8" Wrench
10mm Socket
Extension
Ratchet
T15 Torx
Drill

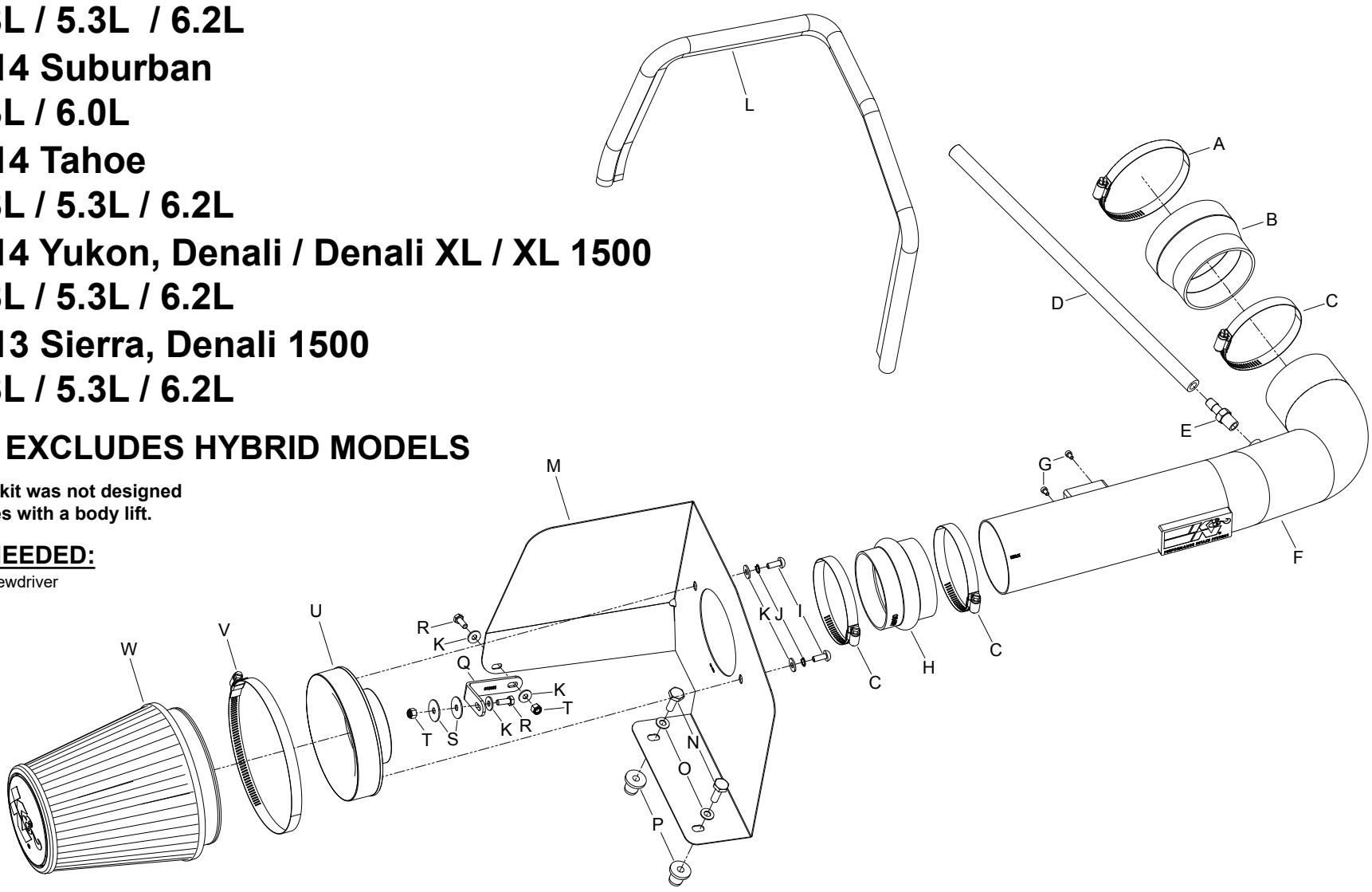

PARTS LIST:

	Description	Qty.	Part #		Description	Qty.	Part #		Description	Qty.	Part #
A	HOSE CLAMP; #64 BLK ZINC	1	08645KA	I	BOLT; M6 X 1 X 16MM BTNHD	2	07730	Q	BRACKET; "L" SM.	1	010031A
B	HOSE; 4"ID TO 3.5"ID X 3"L	1	08497	J	WASHER; 1/4" LOCK	2	08198	R	BOLT; M6-1 X 16MM, HEX	2	07812
C	HOSE CLAMP; #56 BLK ZINC	3	08620KA	K	WASHER; 6MM FLAT	5	08269	S	WASHER; 1"D X 1/4"HOLE	2	08160
D	HOSE; 3/8"ID X 17"L	1	08404	L	EDGE TRIM; (39"L)	1	102496	T	NUT; 6MM NYLOCK, HEXHD	2	07512
E	VENT; 3/8"HOSE, 1/4"NPT	1	08047	M	HEAT SHIELD	1	07635A	U	ADAPTER; UNIV. 6" FILTER	1	21512-1
F	INTAKE TUBE; 3.5"OD X 24.5"L	1	27583TK	N	BOLT; 5/16-18 X 1"L	2	07777	V	HOSE CLAMP; #104 BLK ZINC	1	08697KA
G	BOLT; M4-7 X 8MM, ALNHD	2	07733	O	WASHER; 5/16"ID X 5/8"OD	2	08276	W	AIR FILTER	1	RU-3101HBK
H	HOSE; HUMP 3.5"ID X 2.5"L	1	08699	P	INSERT; 5/16-18 X .600 OD	2	088002				

If you need any assistance please call 1-800-858-3333 to speak with a representative in our Customer Service Center before returning the product.

NOTE: FAILURE TO FOLLOW INSTALLATION INSTRUCTIONS AND NOT USING THE PROVIDED HARDWARE MAY DAMAGE THE INTAKE TUBE, THROTTLE BODY AND ENGINE.

TO START:

1. Turn off the ignition and disconnect the negative battery cable.
NOTE: Disconnecting the negative battery cable erases pre-programmed electronic memories. Write down all memory settings before disconnecting the negative battery cable. Some radios will require an anti-theft code to be entered after the battery is reconnected. The anti-theft code is typically supplied with your owner's manual. In the event your vehicles' anti-theft code cannot be recovered, contact an authorized dealership to obtain your vehicles anti-theft code.



2. Disconnect the mass air electrical connection.



3. Lift up on the engine cover and remove as shown.