TRAIL FORTRESS

BUILT FOR THE TRAIL. CHECKED FOR YOUR TRUCK.

K&N 71-2582 Installation Instructions

Dryflow Intake for Ford Super Duty (2011-2016)

Part number: 71-2582

trailfortress.com/k-n-performance-air-intake-system-71-2582

Scan for fitment, price and install help

INTAKE SYSTEMS FOR VEHICLES LISTED ARE 50 STATE LEGAL. SEE KNFILTERS.COM FOR CARB STATUS ON EACH PART FOR A SPECIFIC VEHICLE.

INSTALLATION INSTRUCTIONS

71-2582
FORD
2011-16 F250 / F350 / F450 Super Duty
2011-14 F550 Super Duty
V8-6.7L Turbo Diesel

NOTE: This kit was not designed to fit vehicles with a body lift.

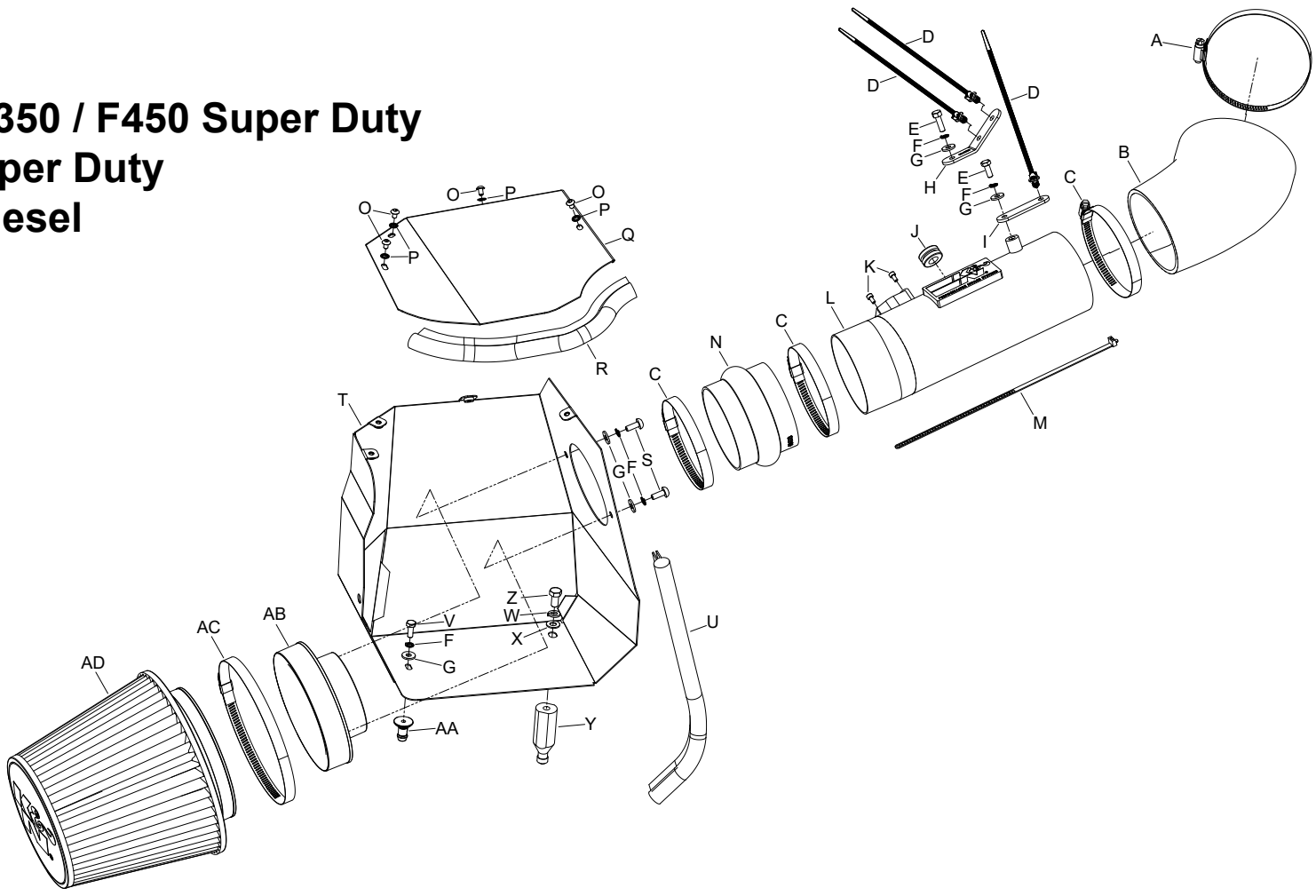

TOOLS NEEDED:

Ratchet
Extension
13mm Socket
10mm Socket
8mm Socket
7/32” Socket
Flat Blade Screwdriver
Pliers
T20 Torx
13mm Wrench
10mm Wrench
4mm Allen Wrench
3mm Allen Wrench

PARTS LIST:

	Description	Qty.	Part #		Description	Qty.	Part #		Description	Qty.	Part #
A	HOSE CLAMP; #72 BLK ZINC	1	08671KA	K	BOLT; M4-.7 X 8MM, ALNHD	2	07733	U	EDGE TRIM; (15”L)	1	102474
B	HOSE; 4.5”ID X 3.5”ID X 5.38”ID	1	08501	L	INTAKE TUBE; 4”OD X 12”L	1	27593TK	V	BOLT; M6 X 1 X 20MM, HEX	1	07795
C	HOSE CLAMP; #64, BLK ZINC	3	08645KA	M	CABLE TIES; 11” BLK	1	21590	W	WASHER; M8, SPLIT LOCK	1	1-3036
D	ZIP TIE; 8” TREE PUSH-MNT	3	1-127	N	HOSE; HUMP 4”ID X 3”L	1	08418	X	WASHER; 5/16”ID X 5/8”OD, FLAT	1	08276
E	BOLT; M6-1 X 16MM, HEX	2	07812	O	BOLT; M5 X .8 X 8MM, BTNHD	4	07740	Y	STANDOFF; 6.0 FORD AIRBOX	1	06532
F	WASHER; M6, SPLIT LOCK	5	1-3025	P	WASHER; 5MM INTERNAL	4	07724	Z	BOLT; 8MM-1.25 X 16MM HEXHD	1	07844
G	WASHER; 1/4”ID X 5/8”OD	5	08275	Q	HEAT SHIELD; LID	1	074090	AA	MOUNT, PLASTIC AIRBOX	1	8-186-1
H	BRACKET; “L”	1	083155	R	EDGE TRIM; (11”L)	1	102468	AB	ADAPTER; #454	1	27300
I	BRACKET; “STRT”	1	083166	S	BOLT; M6 X 1 X 16MM, BNTHD	2	07730	AC	HOSE CLAMP; #104 BLK ZINC	1	08697KA
J	GROMMET; 1”OD, 1/2”ID, 1/2”THK	1	08064	T	HEAT SHIELD	1	074091	AD	AIR FILTER	1	RU-5177HBK

If you need any assistance please call 1-800-858-3333 to speak with a representative in our Customer Service Center before returning the product.

NOTE: FAILURE TO FOLLOW INSTALLATION INSTRUCTIONS AND NOT USING THE PROVIDED HARDWARE MAY DAMAGE THE INTAKE TUBE, THROTTLE BODY AND ENGINE.

TO START:

1. Turn off the ignition and disconnect the negative battery cable.
NOTE: Disconnecting the negative battery cable erases pre-programmed electronic memories. Write down all memory settings before disconnecting the negative battery cable. Some radios will require an anti-theft code to be entered after the battery is reconnected. The anti-theft code is typically supplied with your owner’s manual. In the event your vehicles’ anti-theft code cannot be recovered, contact an authorized dealership to obtain your vehicles anti-theft code.



2. Release the red locking tab and then disconnect the mass air sensor electrical connection and unhook the wiring harness from the air box.



3. Loosen the hose clamp which secures the intake tube to the upper air box.



4. Release the four upper air box retaining clips.



5. Remove the upper air box housing from the vehicle.

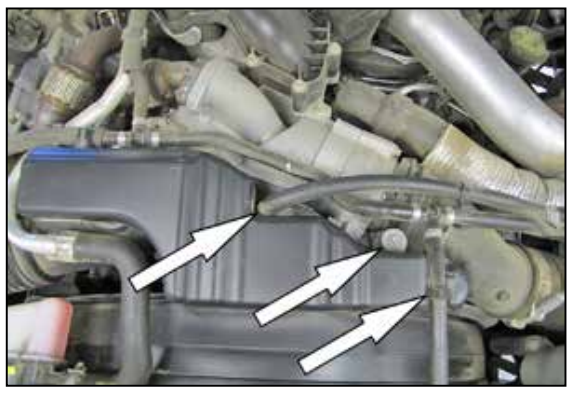

6. Unhook the coolant hoses from the intake plenum and remove the bolt securing the plenum to the engine fan shroud.