TRAIL FORTRESS

BUILT FOR THE TRAIL. CHECKED FOR YOUR TRUCK.

K&N 71-1576 Installation Instructions

Dryflow Intake for Jeep Wrangler & Gladiator

Part number: 71-1576

trailfortress.com/k-n-performance-air-intake-system-71-1576

Scan for fitment, price and install help

INSTALLATION INSTRUCTIONS

Legal for use in all 50 states.

71-1576
JEEP
2018-23 Wrangler JL
2020-23 Gladiator
V6-3.6L

NOTE: Including e-Torque

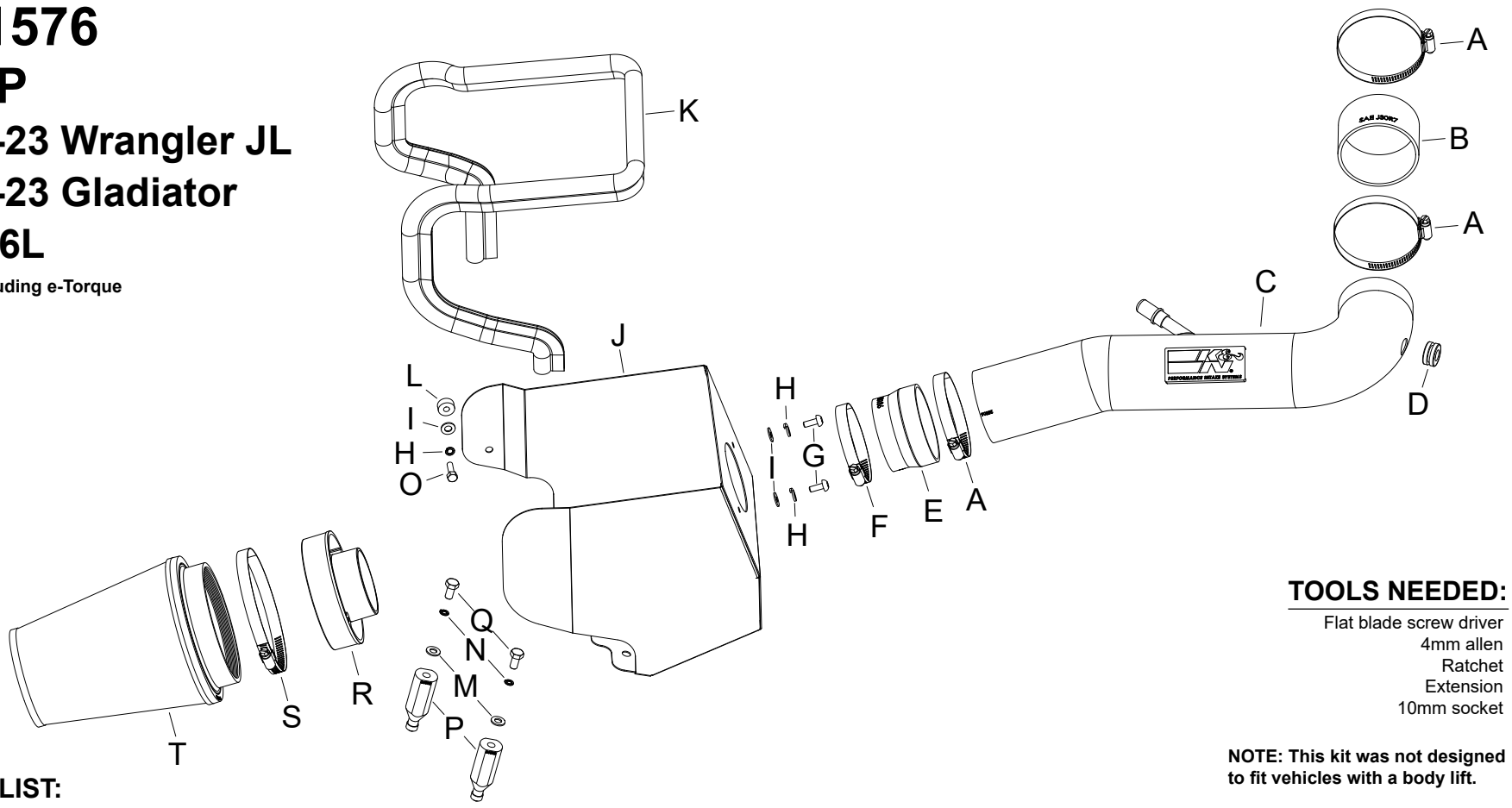

TOOLS NEEDED:

Flat blade screw driver
4mm allen
Ratchet
Extension
10mm socket

NOTE: This kit was not designed to fit vehicles with a body lift.

PARTS LIST:

	Description	Qty.	Part #		Description	Qty.	Part #		Description	Qty.	Part #
A	HOSE CLAMP; #52 BLK ZINC	3	08610KA	H	WASHER, M6 SPLIT LOCK ZINC	3	1-3025	O	BOLT; M6 X 1 X 20MM, HEX	1	07795
B	HOSE; 3.25"ID X 2"L	1	08690	I	WASHER; 6MM FLAT	3	08269	P	STANDOFF; 6.0 FORD AIRBOX	2	06532
C	INTAKE TUBE; 3.25”OD X 22”L	1	25806TK	J	HEAT SHIELD	1	073268	Q	BOLT; 8MM-1.25 X 16MM, HEX	2	07844
D	GROMMET; 1"OD,1/2"ID,1/2"	1	08064	K	EDGE TRIM; (50”L)	1	102481	R	ADAPTER; FILTER, 3.0"OD	1	21569
E	HOSE; 3.25"ID TO 3"ID X 2"L	1	08186	L	SPACER;.313 ALUMINUM	1	KITSPACER05	S	HOSE CLAMP; #80	1	08694KA
F	HOSE CLAMP; #48 BLK ZINC	1	08601KA	M	WASHER; 8MM FLAT	2	08272	T	AIR FILTER	1	RU-3107HBK
G	BOLT; M6 X 1 X 16MM, BTNHD	2	07730	N	WASHER, M8 SPLIT LOCK ZINC	2	1-3036				

If you need any assistance please call 1-800-858-3333 to speak with a representative in our Customer Service Center before returning the product.

NOTE: FAILURE TO FOLLOW INSTALLATION INSTRUCTIONS AND NOT USING THE PROVIDED HARDWARE MAY DAMAGE THE INTAKE TUBE, THROTTLE BODY AND ENGINE.

TO START:

1. Turn off the ignition and disconnect the negative battery cable.
NOTE: Disconnecting the negative battery cable erases pre-programmed electronic memories. Write down all memory settings before disconnecting the negative battery cable. Some radios will require an anti-theft code to be entered after the battery is reconnected. The anti-theft code is typically supplied with your owner’s manual. In the event your vehicles anti-theft code cannot be recovered, contact an authorized dealership to obtain your vehicles anti-theft code.



2. Disconnect the inlet air temperature sensor connection and unhook the wiring harness from the intake plenum. Unhook the coolant by-pass hose from the intake plenum and loosen the hose clamp that secures the tube to the throttle body.



3. Remove the two bolts shown that secure the intake tube to the core support. Push the white locking tab for the crank case vent line down and then disconnect the crank case vent line from the intake tube.



4. Remove the bolt shown that secures the fresh air intake duct to the fender, then lift and remove the complete intake system from the vehicle.
NOTE: The factory mounting grommets should remain in the vehicle.
NOTE: K&N Engineering, Inc., recommends that customers do not discard factory air intake.



5. Remove the inner bolt that attaches fender bracket to the fender.



6. Install the provided coupler (08690) onto the throttle body and secure with the provided hose clamp.