TRAIL FORTRESS

BUILT FOR THE TRAIL. CHECKED FOR YOUR TRUCK.

K&N 71-1561 Installation Instructions

Dryflow Intake for Ram 1500, 2500 & 3500

Part number: 71-1561

trailfortress.com/k-n-performance-air-intake-system-71-1561

Scan for fitment, price and install help

INSTALLATION INSTRUCTIONS

Legal for use in all 50 states.

71-1561
DODGE
2009-18 Ram 1500
2013-18 Ram 2500/3500
V8-5.7L

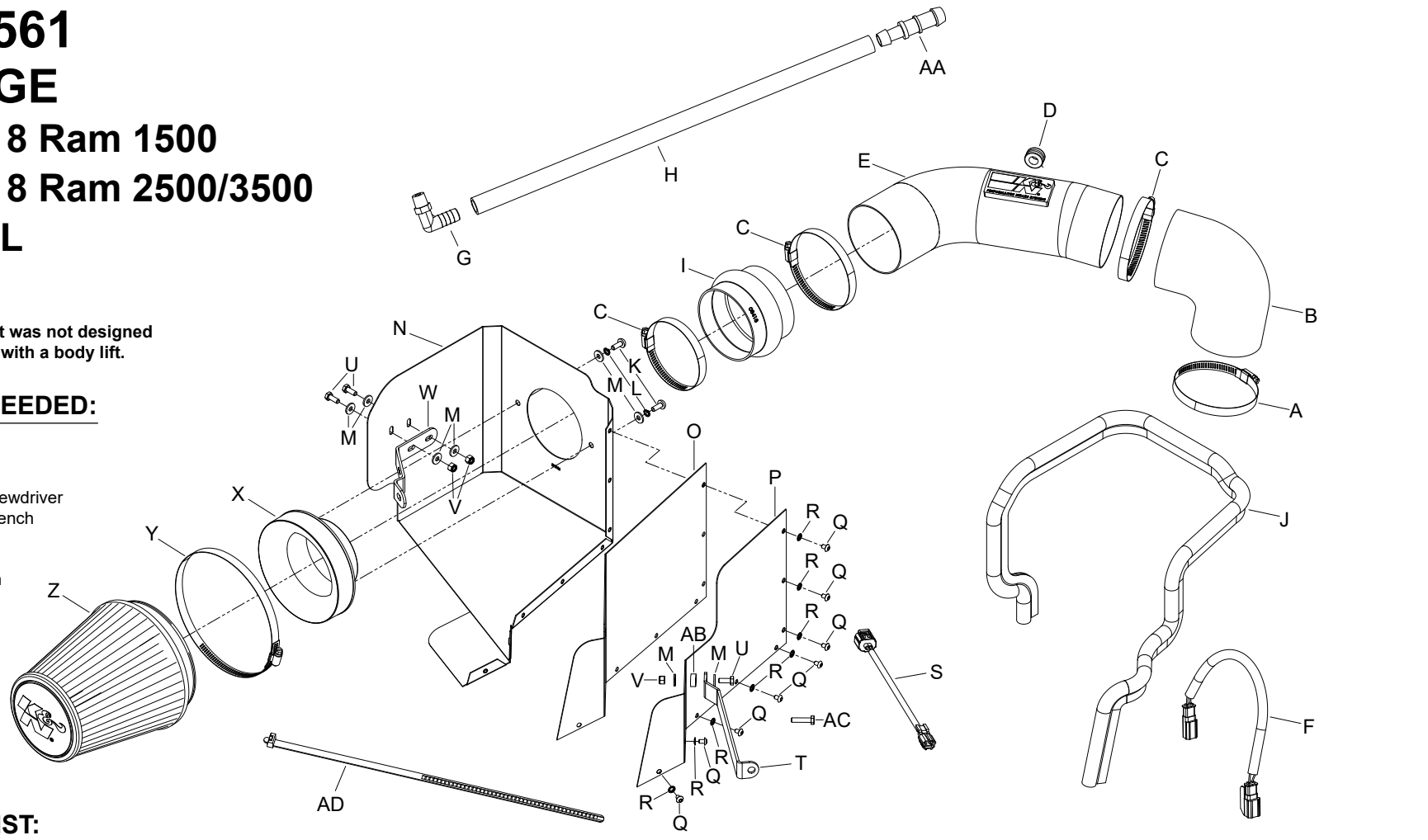

NOTE: This kit was not designed to fit vehicles with a body lift.

TOOLS NEEDED:

5/16” Socket
¾” Wrench
Extension
Flat Blade Screwdriver
4mm Allen Wrench
10mm Socket
13mm Socket
10mm Wrench
Ratchet

PARTS LIST:

	Description	Qty.	Part #		Description	Qty.	Part #		Description	Qty.	Part #
A	HOSE CLAMP #56, BLACK ZINC	1	08620KA	K	BOLT; M6 X 1 X 16MM, BTNHD	2	07730	U	BOLT; M6-1 X 16MM, HEX	3	07812
B	HOSE; 4" TO 3.5"ID 90DEG	1	084086-1	L	WASHER; M6 SPLIT LOCK ZINC	2	1-3025	V	NUT; 6MM NYLOCK, HEXHD	3	07512
C	HOSE CLAMP #64, BLACK ZINC	3	08645KA	M	WASHER; 1/4" ID X 5/8"OD	8	08275	W	BRACKET; "L"	1	083127A
D	GROMMET; 1"OD, 1/2"ID, 1/2”	1	08064	N	HEAT SHIELD	1	073126A	X	ADAPTOR; #454	1	27300
E	INTAKE TUBE; 4”OD X 14”L	1	27587TK	O	HEAT SHIELD; A	1	073127A	Y	HOSE CLAMP #104, BLACK	1	08697KA
F	EXTENSION HARNESS; IAT	1	21680	P	HEAT SHIELD; B	1	073128A	Z	AIR FILTER	1	RU-3101HBK
G	FITTING; VENT, 1/4”NPT, 90°	1	08525-1	Q	BOLT; M5 X .8 X 8MM, BTNHD	8	07740	AA	CONNECTOR; HOSE, 3/4” X 5/8	1	8-171
H	HOSE; 5/8”ID X 21”L	1	5-7021	R	WASHER; 5MM INTERNAL	8	07724	AB	SPACER; .625”OD X .250”ID	1	06555
I	HOSE; HUMP 4”ID X 3”L	1	08418	S	EXTENSION HARNESS, IAT	1	21681	AC	BOLT; M6 X 1 X 20MM, HEX.	1	07795
J	EDGE TRIM; (55"L)	1	102480	T	BRACKET; "Z"	1	083103-1A	AD	CABLE TIES; 11” BLACK	1	21590

If you need any assistance please call 1-800-858-3333 to speak with a representative in our Customer Service Center before returning the product.

NOTE: FAILURE TO FOLLOW INSTALLATION INSTRUCTIONS AND NOT USING THE PROVIDED HARDWARE MAY DAMAGE THE INTAKE TUBE, THROTTLE BODY AND ENGINE.

TO START:

1. Turn off the ignition and disconnect the negative battery cable.
NOTE: Disconnecting the negative battery cable erases pre-programmed electronic memories. Write down all memory settings before disconnecting the negative battery cable. Some radios will require an anti-theft code to be entered after the battery is reconnected. The anti-theft code is typically supplied with your owner’s manual. In the event your vehicles’ anti-theft code cannot be recovered, contact an authorized dealership to obtain your vehicles anti-theft code.



2. Disconnect the inlet air temperature sensor electrical connection.

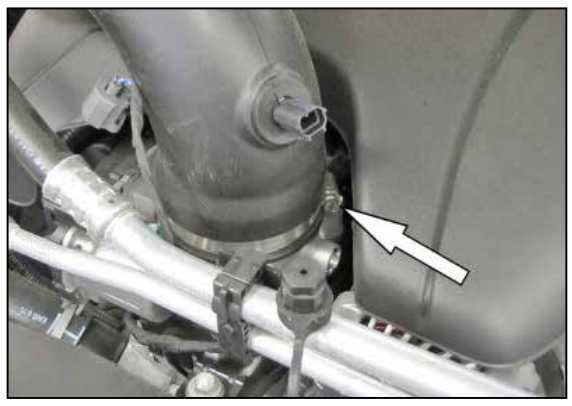

3. Loosen the hose clamp securing the factory intake tube to the throttle body.

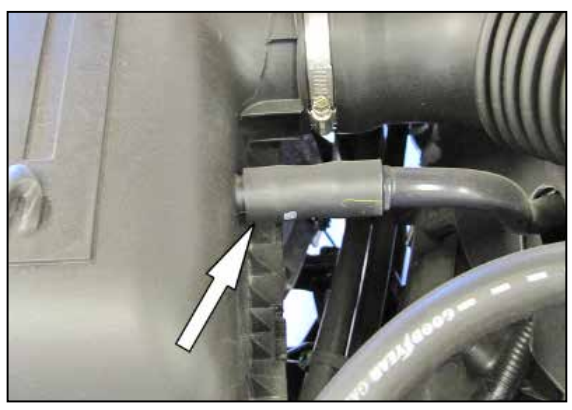

4. Disconnect the crank case vent hose from the upper air filter housing.



5. Disconnect the factory intake tube from the throttle body, then lift up the intake assembly and remove it from the vehicle.
NOTE: K&N Engineering, Inc., recommends that customers do not discard factory air intake.



6. Lift up the engine cover and remove it from the vehicle.