K&N 71-1542 Installation Instructions

Dryflow Intake for Charger, Challenger & 300

Part number: 71-1542

trailfortress.com/k-n-performance-air-intake-system-71-1542

Scan for fitment, price and install help

INTAKE SYSTEMS FOR VEHICLES LISTED ARE 50 STATE LEGAL. SEE KNFILTERS.COM FOR CARB STATUS ON EACH PART FOR A SPECIFIC VEHICLE.

INSTALLATION INSTRUCTIONS

71-1542
DODGE / CHRYSLER
2009-19 Challenger
2006-19 Charger
2005-19 300C
2005-08 Magnum R/T
V8-5.7L
2008-10 Challenger SRT8
2006-10 Charger SRT8
2005-10 300C SRT8
2006-08 Magnum SRT8
V8-6.1L

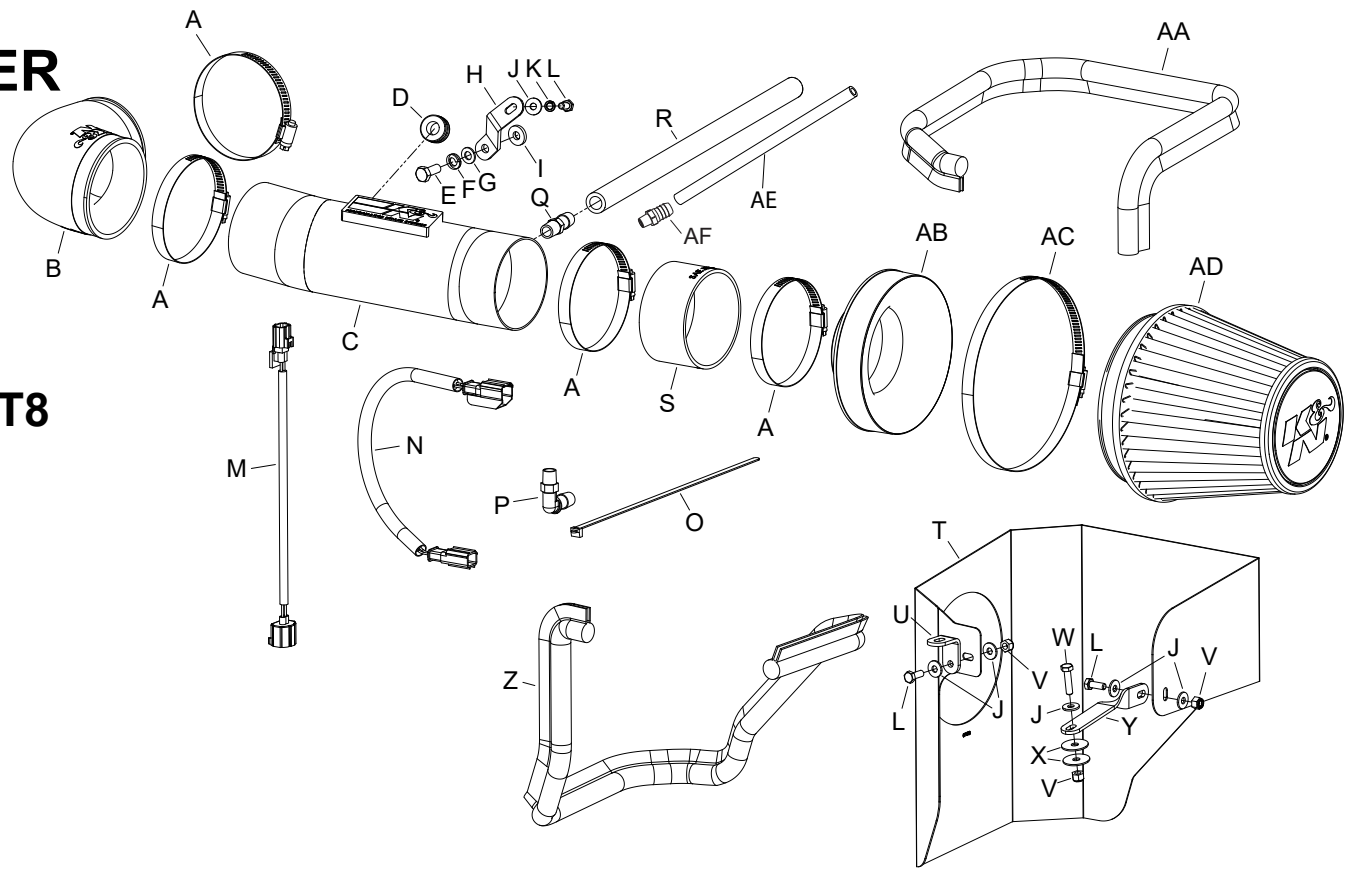

NOTE: Not designed to fit models equipped with SHAKER hoods.

TOOLS NEEDED:

Ratchet
Extension
Flat Blade Screwdriver
Pliers
10mm Socket
13mm Socket
10mm Wrench
5/8” Wrench

PARTS LIST:

	Description	Qty.	Part #		Description	Qty.	Part #		Description	Qty.	Part #
A	HOSE CLAMP #56, BLACK ZINC	4	08620KA	K	WASHER, M6 SPLIT LOCK ZINC	1	1-3025	U	BRACKET; "L", SML	1	070066A
B	HOSE; 3.5"ID 90DEG ANGLED	1	084088	L	BOLT; M6-1 X 16MM, HEX	3	07812	V	NUT; 6MM NYLOCK, HEXHD	3	07512
C	INTAKE TUBE; 3.5”OD X 11.75”L	1	27641TK	M	EXTENSION HARNESS; IAT	1	21681	W	BOLT; M6-1.00 X 25MM	1	07858
D	GROMMET; 1"OD,1/2"ID,1/2"	1	08064	N	EXTENSION HARNESS; IAT	1	21680	X	WASHER; 1"D X 1/4 HOLE	2	08160
E	BOLT; 8MM-1.25 X 20MM, HEX	1	07787	O	CABLE TIES; 11" BLACK	1	21590	Y	BRACKET; TWIST, SHORT	1	070772A
F	WASHER, M8 SPLIT LOCK ZINC	1	1-3036	P	VENT; 90DEG, 1/2"HOSE BLK	1	08110FK	Z	EDGE TRIM; (30”L)	1	102489
G	WASHER; 8MM, FLAT	1	08272	Q	VENT; STRT 1/2" HOSE, 1/4"	1	080022	AA	EDGE TRIM; (39”L)	1	102496
H	BRACKET; "Z" SM.	1	010088A	R	HOSE; 1/2" ID X 17" L	1	08177	AB	ADAPTER; UNIVERSAL, 6"	1	21512-1
I	WASHER; 5/16"ID X 3/4"OD, 1/8"	1	08129	S	HOSE; 3.5" ID X 2" L	1	08698	AC	HOSE CLAMP #104, BLACK	1	08697KA
J	WASHER; 6MM FLAT	6	08269	T	HEAT SHIELD	1	07498A	AD	AIR FILTER	1	RU-3102HBK
								AE	HOSE; 5/8”ID X 17”L	1	08681
								AF	FITTING; VENT 1/4”NPT	1	82638

If you need any assistance please call 1-800-858-3333 to speak with a representative in our Customer Service Center before returning the product.

NOTE: FAILURE TO FOLLOW INSTALLATION INSTRUCTIONS AND NOT USING THE PROVIDED HARDWARE MAY DAMAGE THE INTAKE TUBE, THROTTLE BODY AND ENGINE.

TO START:

1. Turn off the ignition and disconnect the negative battery cable.
NOTE: Disconnecting the negative battery cable erases pre-programmed electronic memories. Write down all memory settings before disconnecting the negative battery cable. Some radios will require an anti-theft code to be entered after the battery is reconnected. The anti-theft code is typically supplied with your owner’s manual. In the event your vehicles anti-theft code cannot be recovered, contact an authorized dealership to obtain your vehicles anti-theft code.



2. Lift up and remove the decorative engine cover.



3. Release the locking tap and then disconnect the inlet air temperature sensor electrical connection.



4. Loosen the hose clamp that secures the intake hose to the throttle body and then pull the intake tube from the throttle body.



5. On models equipped with a 5.7L. Disconnect the crank case vent hose from the valve cover port.



6. On models equipped with a 6.4L, disconnect the crank case vent from the air filter housing as shown.

trailfortress.com/k-n-performance-air-intake-system-71-1542