TRAIL FORTRESS

BUILT FOR THE TRAIL. CHECKED FOR YOUR TRUCK.

K&N 69-9508T Installation Instructions

Metal Intake for Audi A4 & A5 (2014-2015)

Part number: 69-9508T

trailfortress.com/k-n-performance-air-intake-system-69-9508t

Scan for fitment, price and install help

TYPHOON® INTAKE SYSTEMS

NOT LEGAL FOR SALE OR USE ON ANY POLLUTION CONTROLLED MOTOR VEHICLE IN CALIFORNIA OR STATES ADOPTING CALIFORNIA EMISSION PROCEDURES.

See knfilters.com for CARB status on each part for a specific vehicle

INSTALLATION INSTRUCTIONS

69-9508T
AUDI
2014-15 A4 / A5 / A6
L4-2.0L

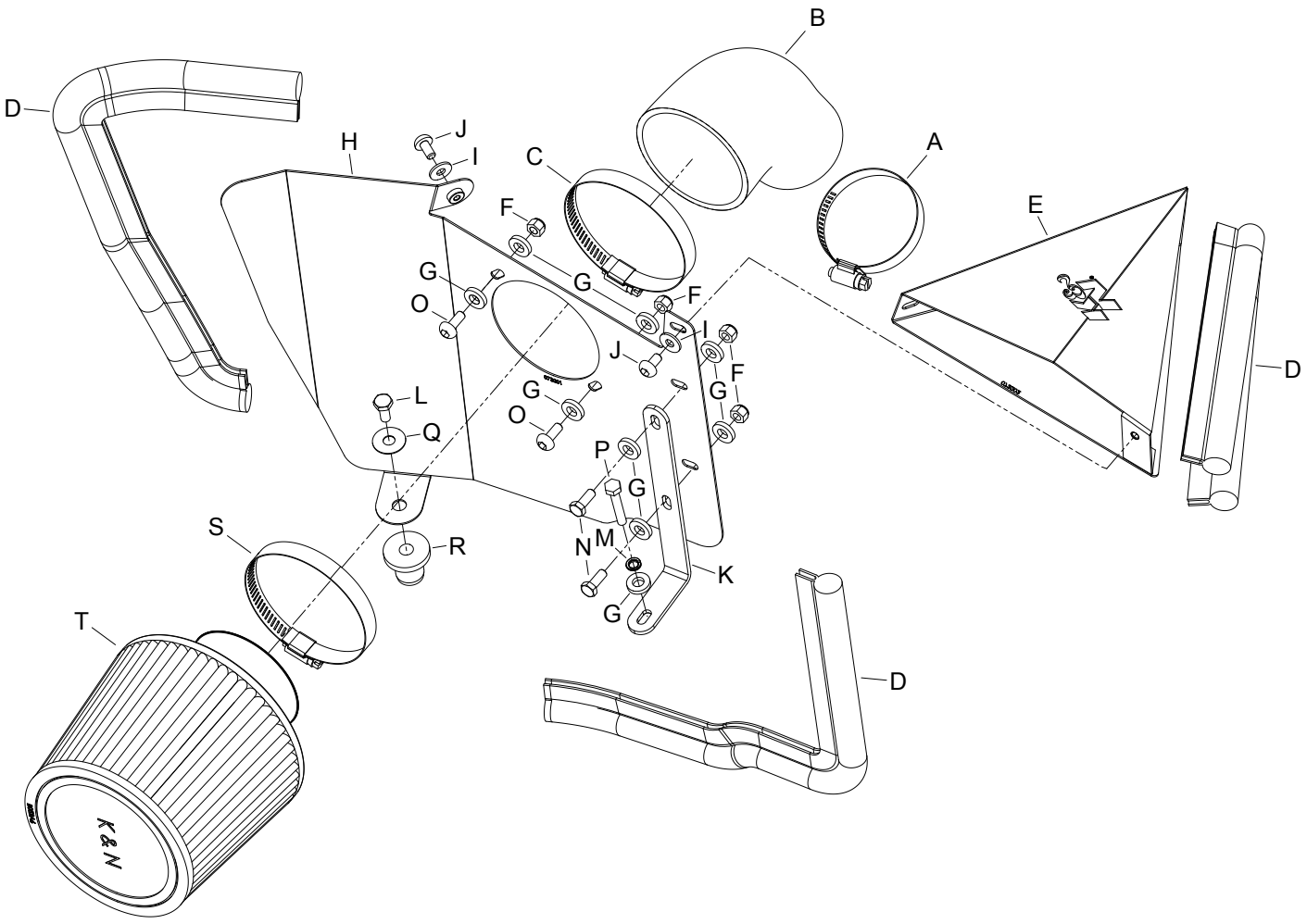

TOOLS NEEDED:

flat blade screw driver
ratchet
10mm socket
9/16” socket
extension
4mm allen key
t25 torx
t27 torx
10mm wrench

PARTS LIST:

	Description	Qty.	Part #		Description	Qty.	Part #		Description	Qty.	Part #
A	hose clamp #36	1	08530	H	heat shield	1	073201	O	bolt; m6 x 1.00 x 16mm, ss	2	07730
B	hose; 2.375"id x 3.125"id, angled	1	08490	I	washer; 6mm flat, ss	2	08269	P	bolt; hex m6-1 x 35mm	1	1-2002
C	hose clamp #52	1	08610	J	bolt; m6 x 1.00" 12mm, ss	2	07794	Q	washer; 3/8" flat washer, ss	1	08134
D	55" edge trim	1	102480	K	bracket; "I" 69-9505, stl, tb/pc	1	083139	R	insert; 3/8-16 x 3/400 x 15/16l	1	08163
E	fresh air duct	1	073202	L	bolt; 3/8"-16 x 1-1/4"l ss hex head	1	07779	S	hose clamp # 48	1	08601
F	nut; 6mm nylock, hexhead	4	07553	M	washer, m6 split lock zinc	1	1-3025	T	air filter	1	RU-3570
G	washer; 1/4"id x 5/8"od	9	08275	N	bolt; 6mm-1.00 x 16mm, ss	2	07812				

NOTE: FAILURE TO FOLLOW INSTALLATION INSTRUCTIONS AND NOT USING THE PROVIDED HARDWARE MAY DAMAGE THE INTAKE TUBE, THROTTLE BODY AND ENGINE.

TO START:

1. Turn off the ignition and disconnect the negative battery cable.
NOTE: Disconnecting the negative battery cable erases pre-programmed electronic memories. Write down all memory settings before disconnecting the negative battery cable. Some radios will require an anti-theft code to be entered after the battery is reconnected. The anti-theft code is typically supplied with your owner’s manual. In the event your vehicles anti-theft code cannot be recovered, contact an authorized dealership to obtain your vehicles anti-theft code.

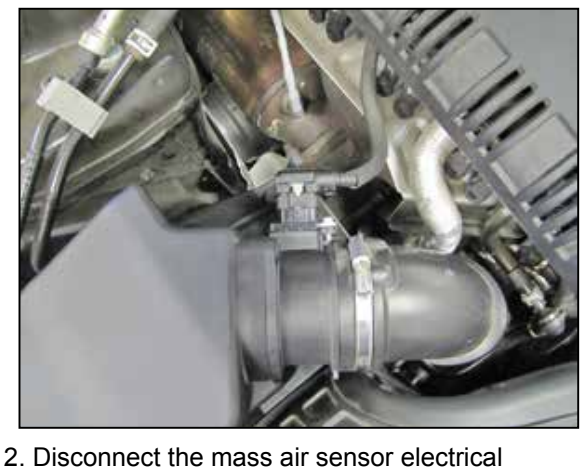

2. Disconnect the mass air sensor electrical connection.



3. Remove the fresh air intake duct from the vehicle.

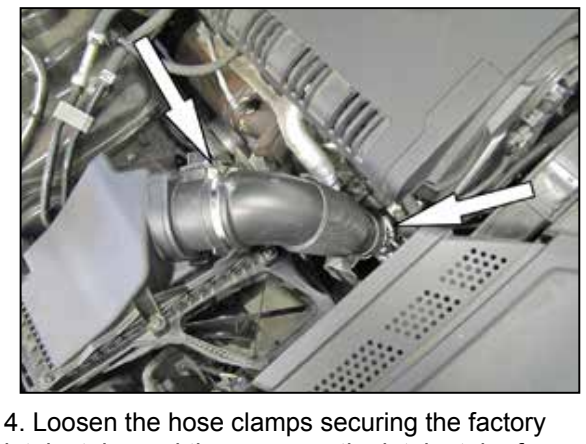

4. Loosen the hose clamps securing the factory intake tube and then remove the intake tube from the vehicle.



5. Lift up the complete air filter housing to dislodge it from the mounting studs and then remove it from the vehicle.
NOTE: K&N Engineering, Inc., recommends that customers do not discard factory air intake.



6. Install the provided turbo inlet hose (08490) onto the turbo and secure with the provided hose clamp.
NOTE: Do not completely tighten at this time.