TRAIL FORTRESS

BUILT FOR THE TRAIL. CHECKED FOR YOUR TRUCK.

K&N 69-8006TTK Installation Instructions

Metal Intake for Subaru WRX (2015-2017)

Part number: 69-8006TTK

trailfortress.com/k-n-performance-air-intake-system-69-8006ttk

Scan for fitment, price and install help

TYPHOON INTAKE SYSTEMS

NOT LEGAL FOR SALE OR USE ON ANY POLLUTION CONTROLLED MOTOR VEHICLE IN CALIFORNIA OR STATES ADOPTING CALIFORNIA EMISSION PROCEDURES.

See knfilters.com for CARB status on each part for a specific vehicle

INSTALLATION INSTRUCTIONS

69-8006TTK
SUBARU
2015-17 WRX
H4-2.0L Turbo

TOOLS NEEDED:

Ratchet
Extension
10mm socket
10MM wrench
Phillips screw driver
Flat blade screw driver
3mm allen key

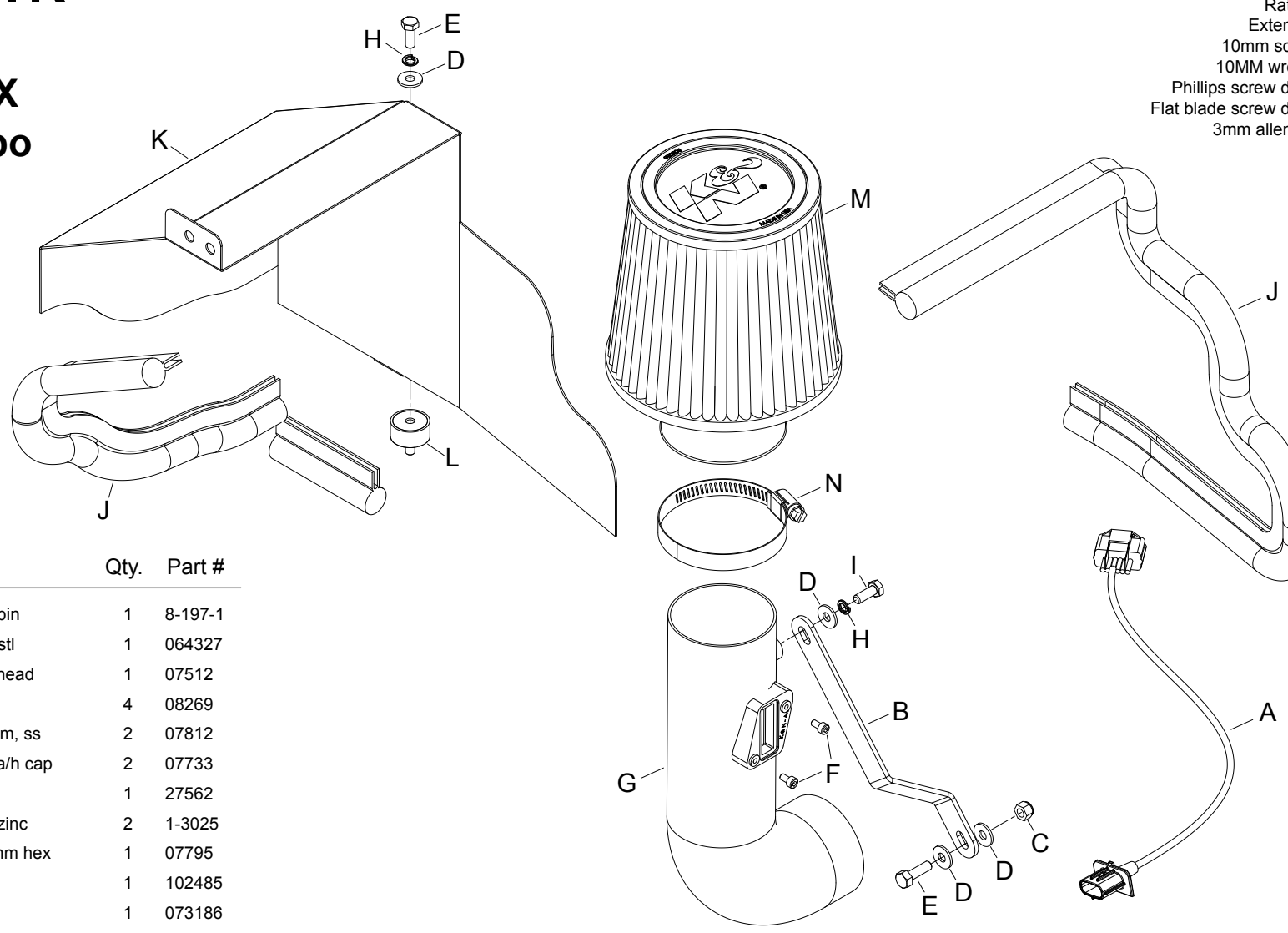

PARTS LIST:

	Description	Qty.	Part #
A	extension harness; 5 pin	1	8-197-1
B	bracket; "I", 69-8006, stl	1	064327
C	nut; 6mm nylock, hexhead	1	07512
D	washer; 6mm flat, ss	4	08269
E	bolt; 6mm-1.00 x 16mm, ss	2	07812
F	bolt; m4 - 0.07 8mm, a/h cap	2	07733
G	intake tube	1	27562
H	washer, m6 split lock zinc	2	1-3025
I	bolt; m6 x 1.00" x 20mm hex	1	07795
J	edge trim (48")	1	102485
K	heat shield	1	073186
L	stud; rubber mnt, m/f, 1/2"l	1	070228
M	air filter	1	RU-4960
N	hose clamp #44	1	08577

If you need any assistance please call 1-800-858-3333 to speak with a representative in our Customer Service Center before returning the product.

NOTE: FAILURE TO FOLLOW INSTALLATION INSTRUCTIONS AND NOT USING THE PROVIDED HARDWARE MAY DAMAGE THE INTAKE TUBE, THROTTLE BODY AND ENGINE.

TO START:

1. Turn off the ignition and disconnect the negative battery cable.
NOTE: Disconnecting the negative battery cable erases pre-programmed electronic memories. Write down all memory settings before disconnecting the negative battery cable. Some radios will require an anti-theft code to be entered after the battery is reconnected. The anti-theft code is typically supplied with your owner's manual. In the event your vehicles anti-theft code cannot be recovered, contact an authorized dealership to obtain your vehicles anti-theft code.



2. Remove the two clips shown securing the fresh air intake scoop and then remove the fresh air intake scoop.



3. Remove the two nuts and one bolt securing the front half of the air filter housing to the vehicle.



4. Release the two clips and then remove the front half of the air filter housing and air filter from the vehicle.

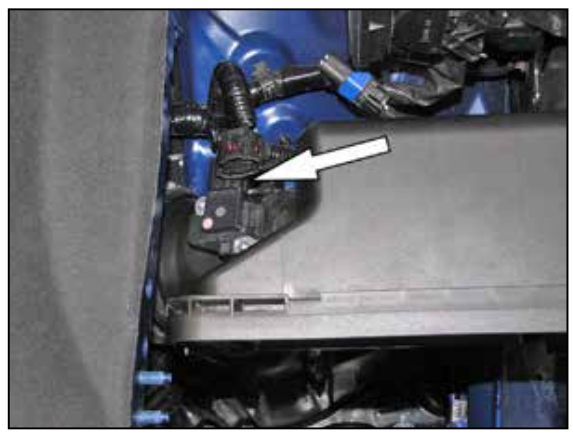

5. Disconnect the mass air sensor electrical connection.



6. Loosen the hose clamp securing the intake tube and remove the nut on the lower mount.
NOTE: The hose clamp may be difficult to loosen because of its position; if necessary the lower valance panel under the car may be removed for easier access.

trailfortress.com/k-n-performance-air-intake-system-69-8006ttk