TRAIL FORTRESS

BUILT FOR THE TRAIL. CHECKED FOR YOUR TRUCK.

K&N 69-3531TS Installation Instructions

Metal Intake for Ford Taurus SHO, Explorer Sport & Flex

Part number: 69-3531TS

trailfortress.com/k-n-performance-air-intake-system-69-3531ts

Scan for fitment, price and install help

TYPHOON INTAKE SYSTEMS

INTAKE SYSTEMS FOR VEHICLES LISTED ARE 50 STATE LEGAL. SEE KNFILTERS.COM FOR CARB STATUS ON EACH PART FOR A SPECIFIC VEHICLE.

INSTALLATION INSTRUCTIONS

69-3531TS
FORD
2013-19 Explorer
2011-18 Taurus SHO
2014-19 Flex
V6-3.5L Ecoboost

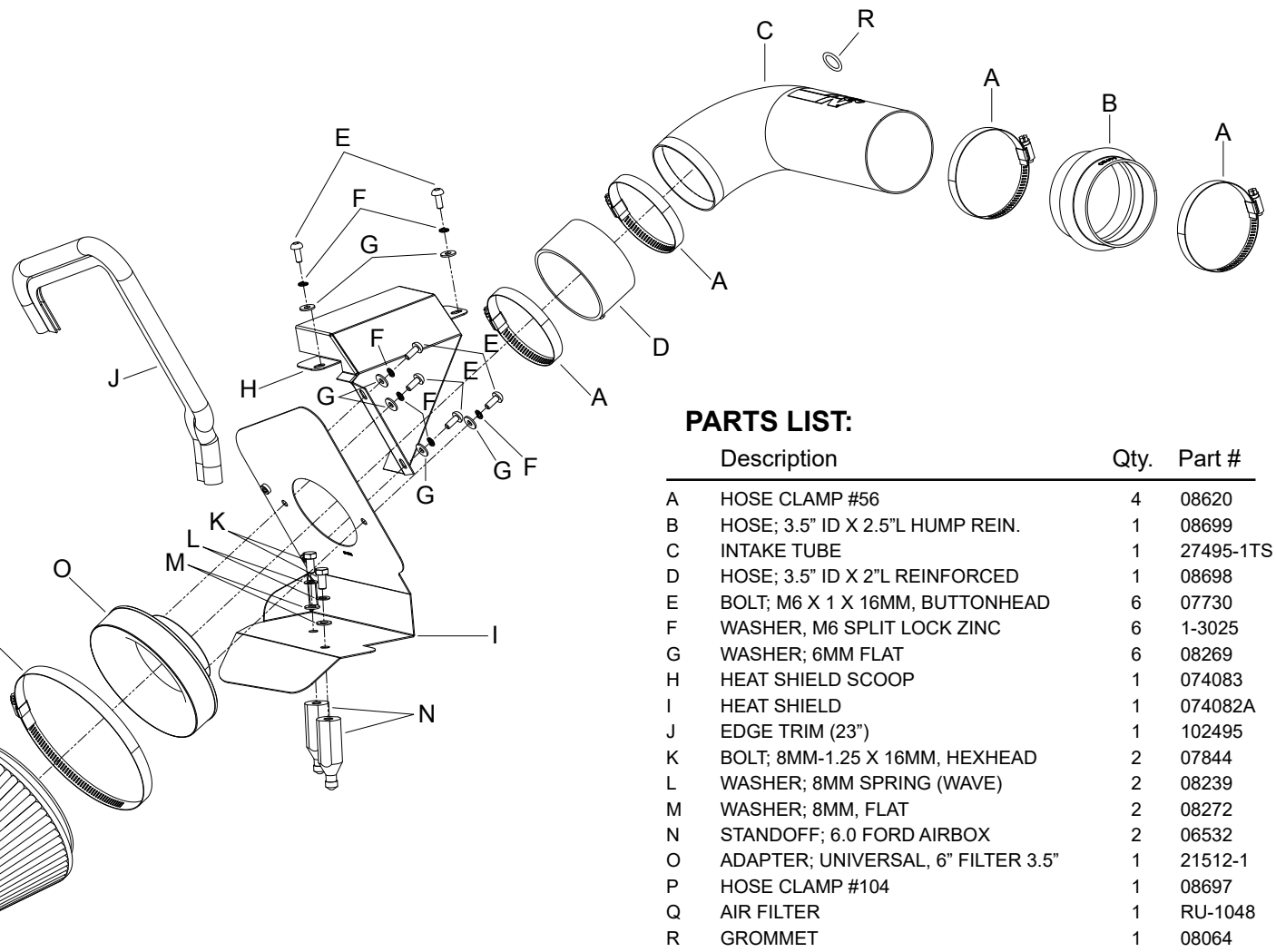

TOOLS NEEDED:

Flat Blade Screwdriver
Ratchet
Extension
8mm Socket
4mm Allen Wrench
13mm Wrench
7/8" Wrench

PARTS LIST:

	Description	Qty.	Part #
A	HOSE CLAMP #56	4	08620
B	HOSE; 3.5" ID X 2.5"L HUMP REIN.	1	08699
C	INTAKE TUBE	1	27495-1TS
D	HOSE; 3.5" ID X 2"L REINFORCED	1	08698
E	BOLT; M6 X 1 X 16MM, BUTTONHEAD	6	07730
F	WASHER, M6 SPLIT LOCK ZINC	6	1-3025
G	WASHER; 6MM FLAT	6	08269
H	HEAT SHIELD SCOOP	1	074083
I	HEAT SHIELD	1	074082A
J	EDGE TRIM (23")	1	102495
K	BOLT; 8MM-1.25 X 16MM, HEXHEAD	2	07844
L	WASHER; 8MM SPRING (WAVE)	2	08239
M	WASHER; 8MM, FLAT	2	08272
N	STANDOFF; 6.0 FORD AIRBOX	2	06532
O	ADAPTER; UNIVERSAL, 6" FILTER 3.5"	1	21512-1
P	HOSE CLAMP #104	1	08697
Q	AIR FILTER	1	RU-1048
R	GROMMET	1	08064

If you need any assistance please call 1-800-858-3333 to speak with a representative in our Customer Service Center before returning the product.

NOTE: FAILURE TO FOLLOW INSTALLATION INSTRUCTIONS AND NOT USING THE PROVIDED HARDWARE MAY DAMAGE THE INTAKE TUBE, THROTTLE BODY AND ENGINE.

TO START:

1. Turn off the ignition and disconnect the negative battery cable.
NOTE: Disconnecting the negative battery cable erases pre-programmed electronic memories. Write down all memory settings before disconnecting the negative battery cable. Some radios will require an anti-theft code to be entered after the battery is reconnected. The anti-theft code is typically supplied with your owner's manual. In the event your vehicles' anti-theft code cannot be recovered, contact an authorized dealership to obtain your vehicles anti-theft code.



2. Loosen the hose clamp shown that secures the factory intake tube.



3. Disconnect the inlet air temperature sensor electrical connection and unhook the wiring harness from the upper airbox.



4. Release the two upper airbox retaining clips.



5. Remove the upper airbox/intake tube assembly from the vehicle.

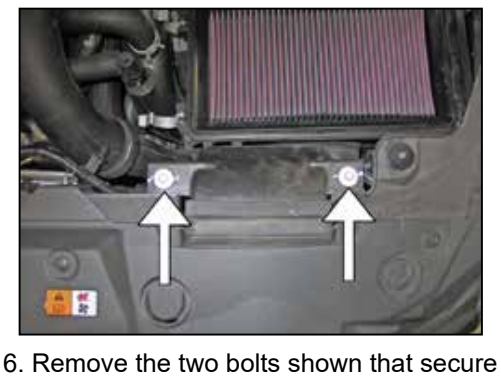

6. Remove the two bolts shown that secure the fresh air duct.



7. Lift up the airbox and remove it from the vehicle.
NOTE: K&N Engineering, Inc., recommends that customers do not discard factory air intake.

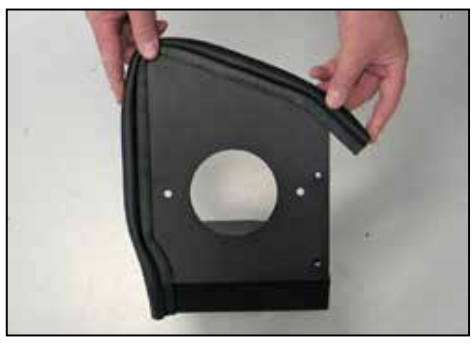

8. Install the provided edge trim onto the heat shield as shown.
NOTE: Some trimming of the edge trim will be necessary.



9. Install the filter adapter into the heat shield as shown and secure with the provided hardware.

trailfortress.com/k-n-performance-air-intake-system-69-3531ts