TRAIL FORTRESS

BUILT FOR THE TRAIL. CHECKED FOR YOUR TRUCK.

K&N 69-3517TS Installation Instructions

Metal Intake for Ford Focus (2012-2018)

Part number: 69-3517TS

trailfortress.com/k-n-performance-air-intake-system-69-3517ts

Scan for fitment, price and install help

TYPHOON® INTAKE SYSTEMS

INTAKE SYSTEMS FOR VEHICLES LISTED ARE 50 STATE LEGAL. SEE KNFILTERS.COM FOR CARB STATUS ON EACH PART FOR A SPECIFIC VEHICLE.

INSTALLATION INSTRUCTIONS

69-3517TS
FORD
2012-18 Focus
L4-2.0L

NOTE: EXCLUDING LEV2 SULEV 2012-18 TEST GROUPS CFMXV02.0VZ2, DFMXV02.0VZ2, EFMXV02.0VZ2, FFMXV02.0VZ2, GFMXV02.0VZ2, HFMXV02.0VZ2 & JFMXV02.0VZ2

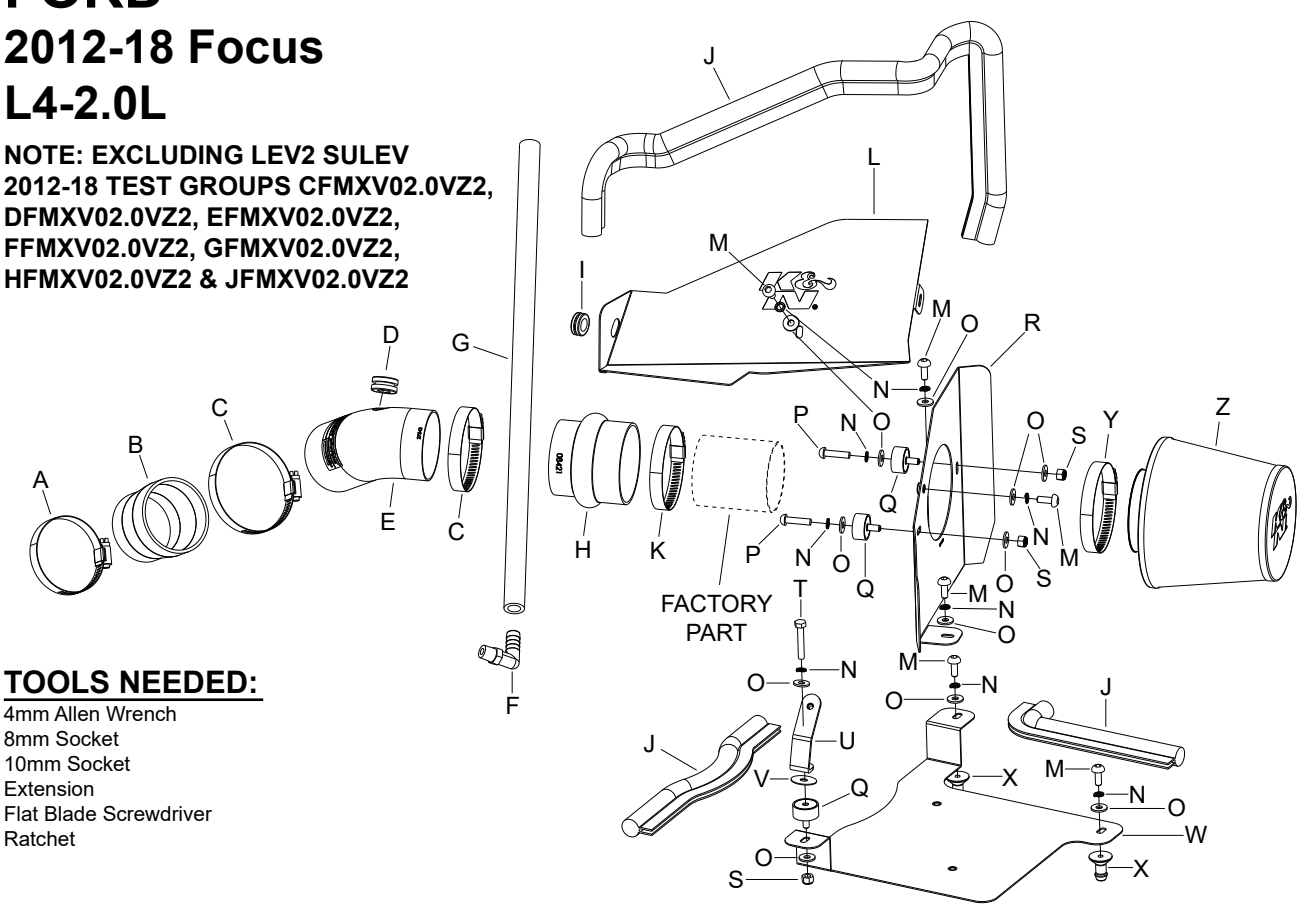

TOOLS NEEDED:

4mm Allen Wrench
8mm Socket
10mm Socket
Extension
Flat Blade Screwdriver
Ratchet

PARTS LIST:

	Description	Qty.	Part #
A	HOSE CLAMP #40	1	08554
B	HOSE; 2-3/4" TO 2-1/2"ID	1	084016
C	HOSE CLAMP #44 STAINLESS	2	08560
D	GROMMET; 1"OD, 1/2"ID, 1/2"	1	08064
E	TUBE; 2.75"OD X 5.5"L	1	27543TS
F	VENT; 90°, 1/2"HOSE, 1/4"NPT	1	08110FK
G	HOSE; 1/2" X 24"L	1	08642
H	HOSE; 3" TO 2-3/4" X 3"L HUMP	1	08421
I	GROMMET; .875ODX.50ID	1	08063
J	EDGE TRIM (55")	1	102480
K	HOSE CLAMP #48	1	08601
L	HEAT SHIELD; FRESH AIR	1	074100
M	BOLT; M6 X 1.00 X 16MM, SS	6	07730
N	WASHER; M6 SPLIT LOCK ZINC	9	1-3025
O	WASHER; 6MM FLAT, SS	12	08269
P	BOLT; M6-1.00 X 25MM SS	2	07729
Q	STUD; RUBBER MNT, M/F, 1/2"L	3	070228
R	HEAT SHIELD; SIDE, MILD STL,	1	074101
S	NUT; 6MM NYLOCK, HEXHEAD	3	07512
T	BOLT; HEX M6-1 X 35MM	1	1-2002
U	BRACKET; "C", STL TB/PC	1	083161
V	WASHER; 1"D X 1/4 FENDER	1	08160
W	HEAT SHIELD; MILD STL, TB	1	074102
X	NIPPLE; HEAT SHIELD MOUNT	2	8-186
Y	HOSE CLAMP # 44	1	08577
Z	AIR FILTER	1	RC-5284

If you need any assistance please call 1-800-858-3333 to speak with a representative in our Customer Service Center before returning the product.

NOTE: FAILURE TO FOLLOW INSTALLATION INSTRUCTIONS AND NOT USING THE PROVIDED HARDWARE MAY DAMAGE THE INTAKE TUBE, THROTTLE BODY AND ENGINE.

TO START:

1. Turn off the ignition and disconnect the negative battery cable.
NOTE: Disconnecting the negative battery cable erases pre-programmed electronic memories. Write down all memory settings before disconnecting the negative battery cable. Some radios will require an anti-theft code to be entered after the battery is reconnected. The anti-theft code is typically supplied with your owner's manual. In the event your vehicles' anti-theft code cannot be recovered, contact an authorized dealership to obtain your vehicles anti-theft code.



2. Release the red locking tab and then disconnect the mass air sensor electrical connection. Also unhook the mass air sensor wiring harness clip from the mass air sensor.

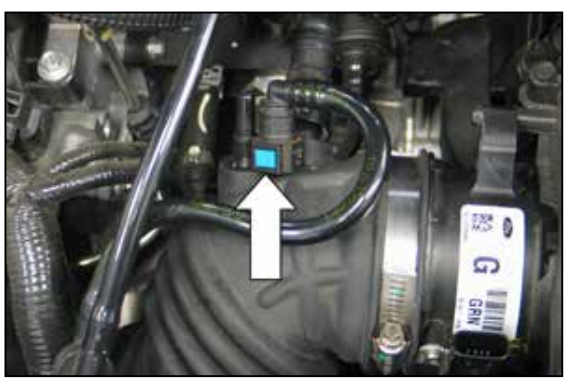

3. Depress the blue locking tab and then disconnect the EVAP vent line.



4. Disconnect the crank case vent line from the intake tube.



5. Disconnect the crank case vent hose from the valve cover and then remove the vent hose from the vehicle.



6. Loosen the hose clamp securing the intake tube to the throttle body.



7. Release the rubber strap securing the fresh air intake scoop to the duct.



8. Lift up the air box assembly to release it from the mounting grommets; remove the air box from the vehicle.



9. Remove the rubber fresh air duct from the vehicle.
NOTE: K&N Engineering, Inc., recommends that customers do not discard factory air intake.