K&N 69-2028TC Installation Instructions

Cold Air Intake for BMW 230i, 330i & 430i

Part number: 69-2028TC

trailfortress.com/k-n-performance-air-intake-system-69-2028tc

Scan for fitment, price and install help

INSTALLATION INSTRUCTIONS

Not legal for sale or use in California on any pollution controlled motor vehicle.

69-2028TC

BMW

2017-25 230i
2017-21 230i xDrive
2017-25 330i
2020 330i GT
2017-19 330i GT xDrive
2017-20 330i xDrive
2017-20 430i
2017-20 430i xDrive Gran Coupe
2017-20 430i Drive
2017-20 430i Gran Coupe

L4-2.0

NOTE: This kit was not designed to fit vehicles with a body lift.

TOOLS NEEDED:

Flat Blade Screw driver
cutters
10mm wrench
3mm wrench
4mm wrench
T20 torx

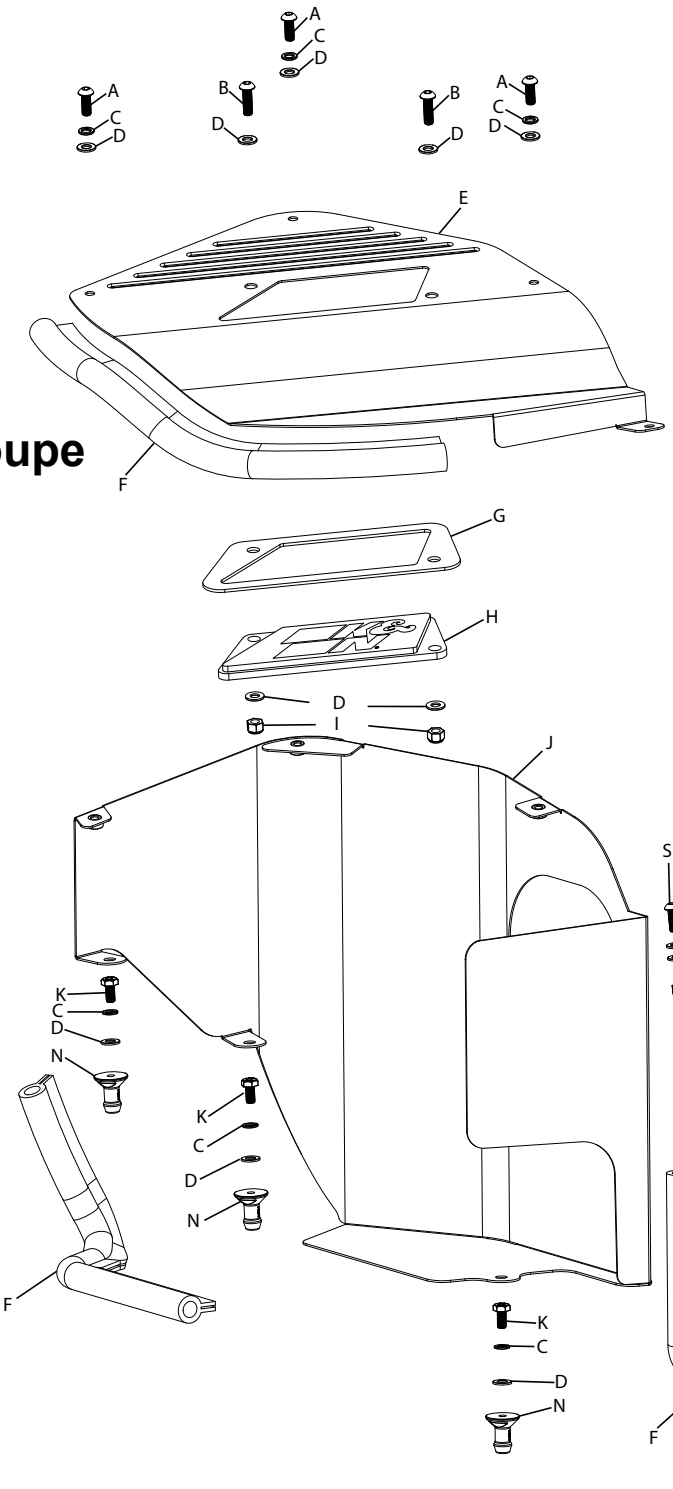

PARTS LIST:

	Description	Qty.	Part #								
A	BOLT; M6-1 X 12MM, BTNHD	3	07794	H	PLATE; K&N LOGO CLEAR	1	08351-1	O	BOLT; M4-.7 X 8MM, ALNHD	2	07733
B	SCREW; M6 X 20MM, BTNHD	2	KIT20BHC3060	I	NUT; 6MM NYLOCK, HEXHD	3	07512	P	TUBE; 3.25"OD X 13"L	1	25845C
C	WASHER; M6 SPLIT LOCK ZINC	6	1-3025	J	HEAT SHIELD	1	074502	Q	HOSE CLAMP; #52	2	08610
D	WASHER; 6MM FLAT	12	08269	K	BOLT; M6 X 1 X 12MM, HEXHD	3	07727	R	HOSE; SILICONE	1	5-326
E	LID; MILD STL	1	074503	L	HOSE CLAMP; #56	1	08620	S	BOLT; M6 X 1 X 16MM, BTNHD	1	07730
F	EDGE TRIM; (61"L)	1	102492	M	AIR FILTER	1	RU-4490				
G	SPACER; ALUM CLEAR BADGE	1	7-364	N	MOUNT; PLASTIC	3	8-186-1				

If you need any assistance please call 1-800-858-3333 to speak with a representative in our Customer Service Center before returning the product.

NOTE: FAILURE TO FOLLOW INSTALLATION INSTRUCTIONS AND NOT USING THE PROVIDED HARDWARE MAY DAMAGE THE INTAKE TUBE, THROTTLE BODY AND ENGINE.

TO START:

1. Turn off the ignition and disconnect the negative battery cable.
NOTE: Disconnecting the negative battery cable erases pre-programmed electronic memories. Write down all memory settings before disconnecting the negative battery cable. Some radios will require an anti-theft code to be entered after the battery is reconnected. The anti-theft code is typically supplied with your owner's manual. In the event your vehicles anti-theft code cannot be recovered, contact an authorized dealership to obtain your vehicles anti-theft code.



2. Lift up and then remove the engine cover.



3. Release the locking tab and then disconnect the mass air sensor electrical connection.