TRAIL FORTRESS

BUILT FOR THE TRAIL. CHECKED FOR YOUR TRUCK.

K&N 69-2026TTK Installation Instructions

Metal Intake for Mini Cooper & BMW X1

Part number: 69-2026TTK

trailfortress.com/k-n-performance-air-intake-system-69-2026ttk

Scan for fitment, price and install help

TYPHOON INTAKE SYSTEMS

NOT LEGAL FOR SALE OR USE ON ANY POLLUTION CONTROLLED MOTOR VEHICLE IN CALIFORNIA OR STATES ADOPTING CALIFORNIA EMISSION PROCEDURES.
See knfilters.com for CARB status on each part for a specific vehicle

INSTALLATION INSTRUCTIONS

69-2026TTK
MINI / BMW
2014-23 Cooper / Cooper S
2017-23 Cooper Clubman
2019-23 Cooper Countryman
2015-19 X1
2014-18 216i
2014-18 218i
2016-17 225xe
L3-1.5L

TOOLS NEEDED:

Ratchet
Extension
10mm Socket
13mm Socket
Flat Blade Screw Driver
2.5mm Allen Key

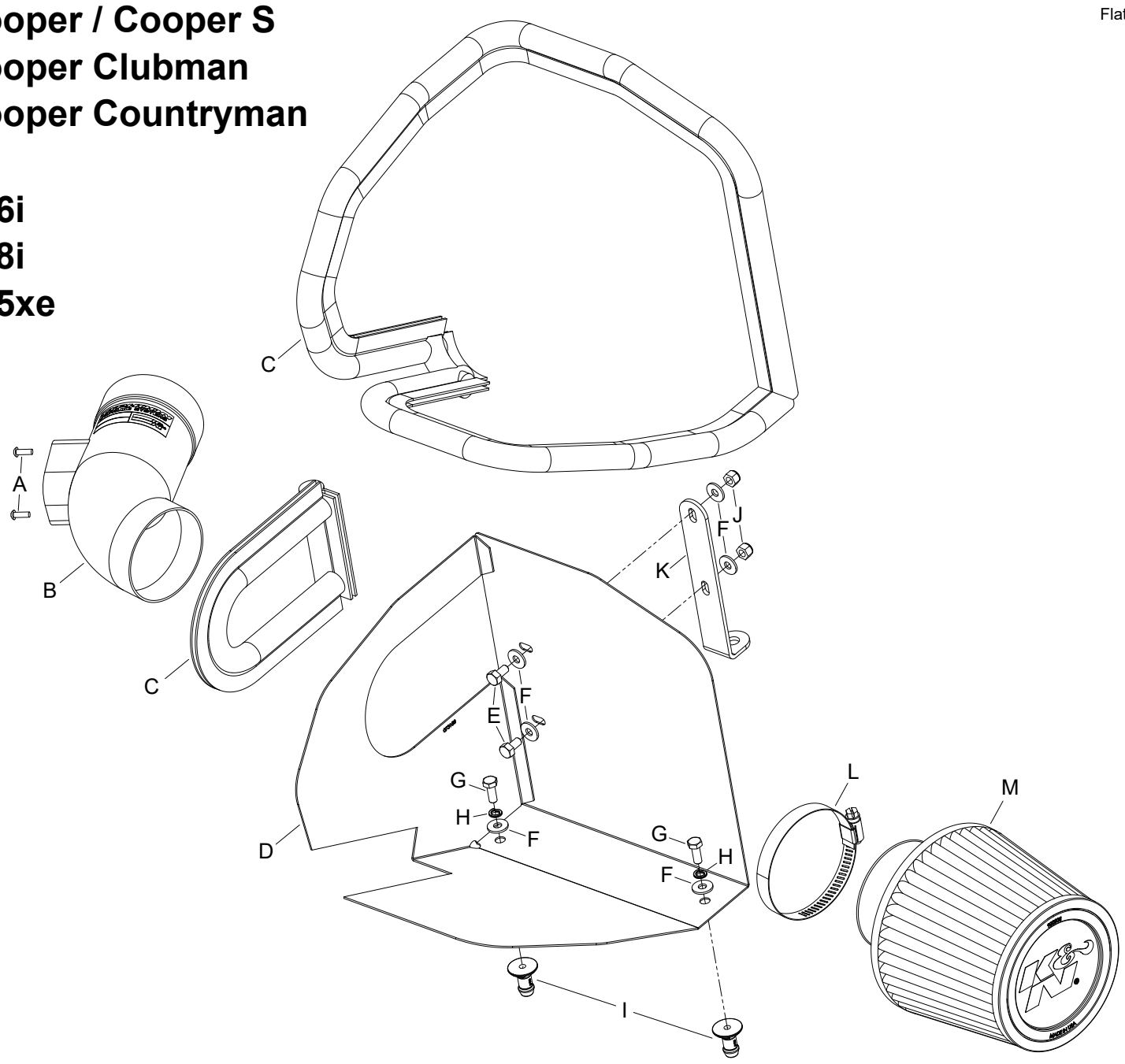

PARTS LIST:

	Description	Qty.	Part #		Description	Qty.	Part #		Description	Qty.	Part #
A	SCREW; M4-.7 X 12, BTNHD	2	07726	E	BOLT; M6 X 1 X 16MM; HEX	2	07727	I	MOUNT; PLASTIC AIRBOX	2	8-186-1
B	TUBE; 3”OD TO 3.125”OD X 8”L	1	27634TK	F	WASHER; 6MM FLAT	6	08269	J	NUT; 6MM NYLOCK, HEXHD	2	07512
C	EDGE TRIM; (75”L)	1	102460	G	BOLT; M6-1 X 16MM, HEX	2	07812	K	BRACKET; “L”	1	083172
D	HEAT SHIELD	1	073188	H	WASHER; M6 SPLIT LOCK ZINC	2	1-3025	L	HOSE CLAMP; #52	1	08610
								M	AIR FILTER	1	RU-5176

If you need any assistance please call 1-800-858-3333 to speak with a representative in our Customer Service Center before returning the product.

NOTE: FAILURE TO FOLLOW INSTALLATION INSTRUCTIONS AND NOT USING THE PROVIDED HARDWARE MAY DAMAGE THE INTAKE TUBE, THROTTLE BODY AND ENGINE.

TO START:

1. Turn off the ignition and disconnect the negative battery cable.
NOTE: Disconnecting the negative battery cable erases pre-programmed electronic memories. Write down all memory settings before disconnecting the negative battery cable. Some radios will require an anti-theft code to be entered after the battery is reconnected. The anti-theft code is typically supplied with your owner’s manual. In the event your vehicles anti-theft code cannot be recovered, contact an authorized dealership to obtain your vehicles anti-theft code.



2. Disconnect the mass air sensor electrical connection.

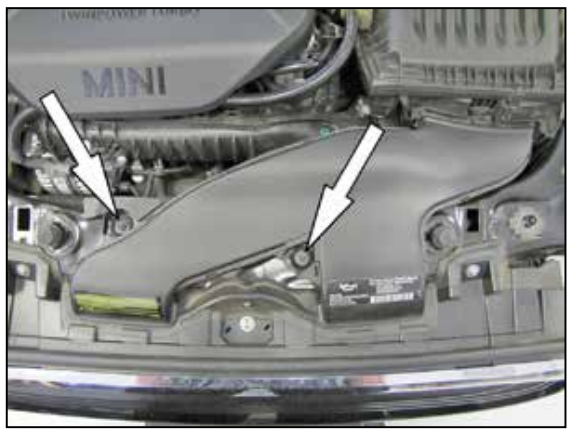

3. Remove the two nuts that secure the fresh air intake scoop and then remove the scoop from the vehicle.